TAC-4 Ordering Guide

Contract Number N68939-95-D-0004

TAC-4 Help Desk: 1-800-203-TAC4

HEWLETT PACKARD

VERSION 2.0 ***JUNE 1996***

© Hewlett-Packard Company 1996

First Printing	April 1995
Second Printing	September 1995
Third Printing	February 1996
Fourth Printing	June 1996

Adobe and PostScript are trademarks of Adobe Systems Incorporated, which may be registered in certain jurisdictions.

Motif, OSF/Motif, and OSF/1 are trademarks of the Open Software Foundation in the United States and other countries.

MS-DOS is a United States trademark of Microsoft Corporation.

UNIX is a registered trademark in the United States and other countries, licensed exclusively through X/Open™ Company Limited.

NOTICE

The information contained in this document is subject to change without notice.

HEWLETT-PACKARD MAKES NO WARRANTY OF ANY KIND WITH REGARD TO THIS MATERIAL INCLUDING BUT NOT LIMITED TO THE IMPLIED WARRANTIES OF MERCHANTABILITY AND FITNESS FOR A PARTICULAR PURPOSE. Hewlett-Packard shall not be liable for errors contained herein or for incidental or consequential damages in connection with the furnishing, performance, or use of this material.

Hewlett-Packard assumes no responsibility for the use or reliability of its software on equipment that is not furnished by Hewlett-Packard.

Use, duplication, or disclosure by the Government shall be limited to determining the purchasing requirements for workstations and servers with peripheral equipment, software, maintenance, training, spare parts, and support services necessary to satisfy the Navy, Marine Corps, Coast Guard, and other Department of Defense components in support of the Tactical Advanced Computer (TAC) Project.

10 9 8 7 6 5 4 3 2 1

TABLE OF CONTENTS

1.0 INTRODUCTION

TAC-4 CONTRACT SUMMARY 1-2
TAC-4 PRODUCT OVERVIEW 1-3
FOR MORE INFORMATION 1-10

2.0 CONFIGURATION AND ORDERING INFORMATION

2.1 HOW TO CONFIGURE A SYSTEM 2-1

2.2 HOW TO PLACE AN ORDER 2-4

3.0 COMMERCIAL HARDWARE PRODUCTS

3.1 WORKSTATIONS 3.1-1

3.2 SERVERS 3.2-1

3.3 PROCESSORS AND UPGRADES 3.3-1

3.3.1 VMEBUS BOARD COMPUTERS AND COMPONENTS 3.3-2
3.3.2 VXI SYSTEMS AND COMPONENTS 3.3-4
3.3.3 PROCESSOR MODULES 3.3-11
3.3.4 RAM EXPANSION MODULES 3.3-12

3.4 PERIPHERAL PRODUCTS 3.4-1

3.4.1 CD-ROM DRIVES 3.4-2
3.4.2 GRAPHICS CARDS AND CONTROLLERS 3.4-4
3.4.3 KEYBOARDS, TRACKBALLS, AND INPUT DEVICES 3.4-14
3.4.4 MASS STORAGE DEVICES 3.4-17
3.4.5 MONITORS AND DISPLAY DEVICES 3.4-27
3.4.6 NETWORKING PRODUCTS 3.4-30
3.4.7 OFFICE POWER DEVICES 3.4-35

3.4.8 OFFICE RACKS AND ACCESSORIES 3.4-38
3.4.9 PRINTERS 3.4-40
3.4.10 VIDEO PRODUCTS 3.4-43
3.4.11 MISCELLANEOUS PRODUCTS 3.4-46

4.0 TACTICAL AND SHIPBOARD PRODUCTS

4.1 RUGGEDIZED RACK-MOUNTED SYSTEMS 4-3

4.2 RUGGEDIZED PORTABLE WORKSTATIONS AND OPTIONS 4-11

4.3 KEYBOARDS, TRACKBALLS, AND INPUT DEVICES 4-17

4.4 RACK-MOUNTED MONITORS 4-19

4.5 SHIPBOARD POWER DEVICES 4-20

4.6 SHIPBOARD RACKS AND ACCESSORIES 4-22

4.7 TIE-DOWN KITS 4-23

4.8 TRANSIT CASES 4-25

4.9 MISCELLANEOUS PRODUCTS 4-28
4.9.1 CABLES AND CONNECTORS 4-28
4.9.2 ENCRYPTION PRODUCTS 4-29

5.0 SOFTWARE PRODUCTS

5.1 OPERATING SYSTEM SOFTWARE 5-3

5.2 COMPILER SOFTWARE 5-7

5.3 NETWORK SOFTWARE 5-9

5.4 DATABASE, SERVER, AND CONNECTIVITY SOFTWARE 5-11

5.5 DOS WINDOWING PRODUCTS SOFTWARE 5-16

5.6 GRAPHICAL USER INTERFACE PRODUCTS 5-17

5.7 GRAPHICS SOFTWARE 5-18

6.0 SUPPORT SERVICES

6.1 DOCUMENTATION 6-2

6.2 CONTRACTOR ENGINEERING TECHNICAL SERVICES 6-4

6.3 MAINTENANCE AND REPAIR 6-9

6.3.1 SELF-MAINTENANCE 6-9

6.3.2 MAIL-BACK/CARRY-IN SERVICE 6-10

6.3.3 ON-SITE SERVICE AND REPAIR 6-11

6.3.4 SPARE PARTS 6-12

6.4 SOFTWARE SUPPORT SERVICES 6-13

6.5 TRAINING 6-15

APPENDICES

CONFIGURATION OPTIONS A-1

CUSTOM CONFIGURATION WORKSHEETS B-1

ORDER FORMS C-1

CLIN TABLE WITH PRICING D-1

ENVIRONMENTAL SPECIFICATIONS E-1

RACK DRAWINGS F-1

INDEX

This page was intentionally left blank
for double-sided reproduction.

1.0 INTRODUCTION

This guide provides information to assist Tactical Advanced Computer-Four (TAC-4) customers in selecting and ordering the computer hardware, software, and support services offered on the TAC-4 contract. This document is organized as follows:

- **Section 1** (this section) offers background information about the contract and the products offered, and identifies the Hewlett-Packard and TAC-4 points of contact for additional information.
- **Section 2, *Configuration and Ordering Information***, describes the process for defining a custom configuration and explains how to place an order.
- **Section 3, *Commercial Hardware Products***, identifies the TAC-4 hardware products typically used in an office or laboratory environment. This section includes descriptions of workstations (including portables), servers, specialized processors (such as VMEbus and VXI), peripherals and other add-on hardware such as mass storage devices, and networking products.
- **Section 4, *Tactical and Shipboard Hardware Products***, identifies the TAC-4 products specifically designed for tactical environments, such as shipboard, submarine, or combat situations. This section includes descriptions of rack-mounted workstations and servers; rugged portable workstations; shipboard racks and accessories; and other products for tactical environments such as tie-down kits and transit cases.
- **Section 5, *Software Products***, describes the operating system software, compilers, relational database management system, and other software products available on the TAC-4 contract.
- **Section 6, *Support Services***, describes the documentation products, technical and software support services, and training courses offered on the TAC-4 contract.
- The **Appendices** include materials designed to facilitate the configuration and ordering process:
  - *Appendix A* contains the ***Configuration Options Table,*** which summarizes the hardware options available and supported on each of the base processors.
  - *Appendix B* contains ***Custom Configuration Worksheets*** used for defining custom configurations.
  - *Appendix C* includes reproducible copies of the ***Order Forms*** used to place a TAC-4 order.
  - *Appendix D* is the ***CLIN Table***, which lists the available products by CLIN Contract Line Item Number (CLIN) and identifies the Original Equipment Manufacturer (OEM), model number, and price.
  - *Appendix E* identifies the ***Environmental Specifications*** for TAC-4 products, such as the designated environmental code, physical dimensions, weight, and electrical requirements, as well as the Mean Time Between Failure (MTBF).
  - *Appendix F* includes detailed ***Rack Drawings*** for the rack-mounted systems and rack components deployed in tactical environments.

- The **Index** provides a quick and easy way to locate a specific product by name or type, such as a "CD-ROM."

We suggest you review each section of this document to acquaint yourself with the various products and services available on TAC-4. After familiarizing yourself with the products offered, return to Section 2 to begin the configuration and ordering process.

TAC-4 CONTRACT SUMMARY

On January 19, 1995, the Naval Information Systems Management Center (NISMC) awarded to Hewlett-Packard Company the Tactical Advanced Computer Four (TAC-4) Contract Number N68939-95-D-0004. This project, the Navy's fourth generation of commercial-based computer systems, provides a source of commercial-based workstations and servers packaged for office environments or ruggedized for shipboard or tactical use. Through this contract, Hewlett-Packard offers workstations and servers with peripheral equipment, software, maintenance, training, and support services to the Navy, Marine Corps, Coast Guard, and other Department of Defense agencies in support of the Desktop Tactical Computer (DTC) Project.

TAC-4 computers will satisfy the requirements of the Systems Commands, Type Commands, Composite Warfare/Battle Group Commanders, and their subordinate units and command centers for common computer equipment with ruggedization, local-area network, multi-level security, and data encryption requirements.

TAC-4 workstations and servers will be used as tactical decision aids in support of the fleets and operating forces, and will provide the computing engines to replace the equipment currently in use in the SNAP I, SNAP II, and NALCOMIS logistics and administrative support programs. Much of the equipment will be installed aboard surface ships and submarines, where space is extremely limited and the reliability of systems under adverse operating conditions is crucial. Large real and virtual memory, large disk storage subsystems, sophisticated graphics systems, and a variety of peripheral equipment are available.

TAC-4 software includes POSIX and GOSIP compliance, Ada, FORTRAN, COBOL, C, C++, Relational Database Management Systems (RDBMS), and other software products. Communications include local-area networks, data encryption, and a number of standard military communications interface requirements. Security provisions include a secure operating system.

The contract offers a three-year equipment-ordering period with an additional three years of maintenance, training, and services. The hardware warranty period is for the full contract life (72 months), from contract award in January 1995.

Note for TAC-3 Customers:

TAC-3 and TAC-4 are distinct contracts. Even though HP systems are available in both contracts, there are technical and contractual differences between the two. In general, TAC-3 systems are maintained and provisioned by Hughes Data Systems. Hewlett-Packard, as the TAC-4 contractor, provides these services for TAC-4 equipment only. *See Section 6.4 for an explanation of the support offered by HP to TAC-3 and TAC-4 customers.*

TAC-4 PRODUCT OVERVIEW

Under the TAC-4 contract, Hewlett-Packard initially offered three families of workstations and servers to the TAC-4 community to meet or exceed the performance requirements of the eight processor configurations identified in the Request for Proposal (RFP). These included the HP 9000 Model J210 (in both deskside and rugged rack configurations) to meet the requirements of Processors A through D; the HP Model 712/60 (in the commercial and rugged portable configurations) for Processors E and F, the HP Model 712/80 for Processor G; and the HP Model 742 (later refreshed by the HP Model 743*i*) for Processor H.

Hewlett-Packard is excited to announce that the contract now offers a number of new products and technologies to support the TAC community. These new products are identified by a diamond (♦) throughout this guide and include the following:

- ♦ Symmetric Multiprocessing (SMP) High-Performance Workstations (HP 9000 J-Class Workstation, Model J210XC)
- ♦ Personal Workstations (HP 9000 C-Class Workstation, Model C110)
- ♦ VME Portable Workstations (Telos ACE VME Workstation)
- ♦ Enhanced Commercial Portable Workstations (SAIC Galaxy)
- ♦ Windows Application Servers (HP 501 and HP 502)
- ♦ Symmetric Multiprocessing (SMP) Servers (HP 9000 D-Class and K-Class Servers; Models D350, K220, and K420)
- ♦ VXIbus Computer Systems and Components
- ♦ Higher Capacity Mass Storage Devices
- ♦ Commercial Racks
- ♦ RDBMS (Informix)
- ♦ HP Consulting Services.

Highlights of the current TAC-4 product offerings are summarized below.

Workstations

The **HP 9000 J-Class Workstation Model J210XC (♦)** is an enhanced, high-performance UNIX-based graphics workstation offering symmetric multiprocessing with optional dual 120-MHz PA-RISC 7200 processors, each including a 2-MB cache (combined instruction and data). The HP Model J210XC workstation can be configured with:

- up to four 17- or 19-inch pedestal-mount color monitors (1280 x 1024)
- up to 1 GB of Error Checking and Correcting (ECC) memory
- up to two internal 1-, 2-, and 4-GB hard disk drives (FW-SCSI)
- up to two removable media devices (which include a 3.5- and 5.25-inch floppy disk drives, CD-ROM, 2-GB and 4-GB 4-mm DDS DAT, and 5-GB 8-mm tape drive — all single-ended SCSI)
- a keyboard plus mouse or trackball
- a second CPU (with 2-MB cache) for symmetric multiprocessing (*available through other acquisition means — please contact HP for further details*)
- UNIX operating system software.

The Model J210XC has one integrated LAN interface (IEEE 802.3/Ethernet) and supports IEEE 488, MIL-STD-1553B, MIL-STD-1397 (Type D, E, and parallel), FDDI, and ATM. It also supports an 8-port serial controller, EISA 100VG-AnyLAN, and a EISA X.25 Link with EISA communication boards.

The **HP 9000 J-Class Workstation Model J210** is a high-performance UNIX-based graphics workstation featuring a 120-MHz PA-RISC 7200 processor with a 512-KB cache (combined instruction and data). The HP Model J210 workstation can be configured with:

- up to four 17- or 19-inch pedestal-mount color monitors (1280 x 1024)
- up to 1 GB of ECC memory
- up to two internal 1-, 2-, and 4-GB hard disk drives (FW-SCSI)
- up to two removable media devices (which include a 3.5- and 5.25-inch floppy disk drives, CD-ROM, 2-GB and 4-GB 4-mm DDS DAT, and 5-GB 8-mm tape drive — all single-ended SCSI)
- a keyboard plus mouse or trackball
- a second CPU (with 512-KB cache) for symmetric multiprocessing (*available through other acquisition means — please contact HP for further details*)
- UNIX operating system software.

The Model J210 has one integrated LAN interface (IEEE 802.3/Ethernet) and supports IEEE 488, MIL-STD-1553B, MIL-STD-1397 (Type D, E, and parallel), FDDI, and ATM. It also supports an 8-port serial controller, EISA 100VG-AnyLAN, and a EISA X.25 Link with EISA communication boards.

The **HP 9000 C-Class Model C110 Personal Workstation (♦)** brings the world's fastest graphics to the desktop in a new system package based on HP's high-performance PA-RISC processor. The C-class workstations are ideal for desktop users performing computational analysis, advanced 3D design, and compute- and memory-intensive processing workloads in engineering applications such as mechanical and electronic design automation, technical software development, geographic information systems, architecture, engineering and construction, and medical imaging.

The Model C110 offers the following notable features:

- 120-MHz PA-RISC 7200 processor with a 256-KB cache (combined instruction and data)
- up to 512 MB of ECC RAM with up to 8-way interleaving
- 2-GB and/or 4-GB internal hard disk drives (FW-SCSI)
- support for up to two internal removable media devices including a 3.5-inch floppy disk drive, a CD-ROM, or a 4-GB DAT drive
- a keyboard plus mouse or trackball
- UNIX operating system software.

The Model C110 has one integrated LAN interface (IEEE 802.3/Ethernet) and supports IEEE 488, MIL-STD-1553B, MIL-STD-1397 (Type D, E, and parallel), FDDI, and ATM. It also supports an 8-port serial controller, VME bus extender, video frame grabber, EISA 100VG-AnyLAN, and a EISA X.25 Link with EISA communication boards.

The **HP 9000 Model 712 Low-Cost Workstation** offers a powerful UNIX-based desktop system. The Model 712 can be configured to include:

- a 17- or 19-inch pedestal-mount color monitor
- up to 128 MB of ECC RAM for the Model 712/80 and up to 192 MB of ECC RAM for the Model 712/100
- internal 1-GB or 2-GB hard disk drives (SE-SCSI)
- one internal 3.5-inch floppy disk drive
- general I/O expansion slot
- a keyboard plus mouse or trackball
- DOS Windowing/Networking Environment
- UNIX operating system software.

The HP Model 712 has one integrated LAN interface (IEEE 802.3/Ethernet). Optional interfaces include a second serial port (RS-232C), an X.25 port, a second monitor port, and a second LAN AUI port.

Portable Workstations

The **Telos ACE VME Portable Workstation (♦),** which includes the HP Model 743*i*/100 VMEbus Single-Board Computer, offers a TAC-4 solution with the portability and ruggedness necessary to support mobile command and communications, plus the power of a high-performance workstation. The key to the system's flexibility is its modular design with a broad array of peripheral devices and communications options to meet the most demanding shipboard, airborne, and ground mobile requirements. Features of the VME Portable Workstation include:

- HP Model 743*i*/100 VMEbus board computer
- five 6U-slot VME card cage
- optional internal and external display capabilities
- 3.5-inch floppy disk drive
- two 4-GB, half-height, 3.5-inch removable disk drives (FW-SCSI)
- 4-mm DAT drive and CD-ROM
- power supply module with internal AC/DC auto-switching power
- battery backup (10 minutes typical, dependent upon configuration).

The **Enhanced Portable Workstation (♦) (SAIC Galaxy)** includes the HP Model 712/80 PA-RISC with floating-point processor. The Galaxy is fully software-compatible with the HP 9000 Series 700 workstations. Features of the Portable Workstation include:

- HP Model 712/80 PA-RISC 7100LC processor
- 10.4-inch active color matrix LCD (1024 x 768)
- ECC memory expandable to 128 MB
- 3.5-inch, 1.44-MB floppy disk drive
- 2-GB hard disk drive (SE-SCSI)
- IEEE 802.3/Ethernet Interface
- trackball and 3-button pad
- DOS Windowing/Networking Environment
- UNIX operating system software.

Servers

The **HP Model K420 K-Class Server (♦),** with its state-of-the-art design based on HP's PA-RISC 7200 technology, is powerful and highly expandable. This server represents a robust symmetric multiprocessing (SMP) implementation that offers unprecedented midrange performance and lasting value.

The Model K420 server offers a 10X performance range within a compact and affordable system cabinet. The true benefit of the sophisticated PA-7200 CPU design is the resulting simplicity of the K-Class system-level architecture. It is cost-effective, modular, easy to upgrade, reliable, and provides high commercial and technical performance.

The Model K420 server is ideally suited for general-purpose use in a technical environment such as data management applications, as an NFS server, or for off-loading analysis and software compilation. The Model K420 offers the following notable features:

- 120-MHz PA-RISC 7200 processor
- up to four-way symmetric multiprocessing
- 1-MB by 1-MB cache per CPU (combined instruction and data)
- up to 2-GB of ECC memory, with up to 32-way interleaving
- multi-channel I/O, ideal for disk mirroring
- up to 288-MB/second I/O throughput
- 960-MB/sec (peak) processor bus with split-read transaction for enhanced SMP scalability
- five HP-PB I/O slots and five HP-HSC slots
- four internal disk storage bays
- memory-mapped file system optimized for I/O-intensive relational database management applications
- UNIX operating system software (16-user license).

The **HP 9000 Model K220 K-Class Server** (♦) is also a powerful and highly expandable midrange server. The Model K220 server offers the same 10X performance range as the Model K420, in the same compact, affordable system cabinet. With fewer expansion slots and reduced RAM, the K220 is more cost-effective, yet offers the same modularity, upgrade path, and reliability of the Model K420.

The Model K220 server is ideally suited for general-purpose use in a technical environment such as data management applications, as an NFS server, or for off-loading analysis and software compilation. The Model K220 offers the following notable features:

- 120-MHz PA-RISC 7200 processor
- up to four-way symmetric multiprocessing
- 1-MB by 1-MB cache per CPU (combined instruction and data)

- up to 1-GB of ECC memory, with up to 32-way interleaving
- multi-channel I/O, ideal for disk mirroring
- up to 288-MB/second I/O throughput
- 960-MB/sec (peak) processor bus with split-read transaction for enhanced SMP scalability
- four HP-PB I/O slots and one HP-HSC slot
- four internal disk storage bays
- memory-mapped file system optimized for I/O-intensive relational database management applications
- UNIX operating system software (16-user license).

The **HP 9000 D-Class Model D350 Server(♦)** is the newest member of the HP 9000 server family, providing 2-way SMP performance that rivals midrange servers. With capability for a 6X performance scalability range, coupled with I/O and processor expandability, all within a highly affordable system cabinet, the D-Class Server brings expandability and investment protection unseen in the low-end market. The Model D350 offers the following notable features:

- two-way symmetric multiprocessing
- up to 768 MB of ECC memory
- integrated 650-MB CD-ROM drive
- 20-MB fast-wide, differential SCSI-2 disk channel
- eight I/O slots
- five internal hot-pluggable FW-SCSI disk drive bays
- three internal removable media bays
- UNIX operating system software (16-user license).

The **HP 501 and HP 502 Windows Application Servers (♦)** provide a virtual PC window to any UNIX desktop. Users are presented with the exact look and feel of the applications and environment with the same performance of a dedicated PC. The HP 500 is a total system and is completely Open Systems compliant. The HP 500 offers the following notable features:

- single (HP 501) or dual (HP 502) 133-MHz Pentium processors
- 64 MB (HP 501) or 128 MB (HP 502) of RAM, expandable to 256 MB
- 3.5-inch floppy drive
- quad-speed (4X) CD-ROM drive
- 15-inch color console monitor
- PC-101 keyboard and 3-button mouse

- 1-GB (HP 501) or 2-GB (HP 502) internal hard disk drives (SE-SCSI)
- 15-user (HP 501) or 30-user (HP 502) license for HP 500 Server Software.

Specialized Processors

The **HP Model 743*i*** is a **VMEbus Single-Board Computer** that packs incredible performance into one 6U VMEbus slot. The Model 743*i* provides VME D64 master/slave capability for excellent throughput, with onboard ECC DRAM memory for correcting single-bit errors and detecting multi-bit errors. The Model 743*i* can be ordered as a VME single-board computer in two clock speeds (64 MHz and 100 MHz), as well as configured in the HP Model 748*i* system chassis.

The **HP Model V743 VXIbus Computer System (♦)** is a 100-MHz PA-7100LC processor that delivers extraordinary performance and direct access to the VXI backplane. The V743 computer was developed specifically as an embedded HP-UX (UNIX) controller for VXI, thereby providing the high I/O performance of direct VXI backplane support, the space savings of an embedded computer, and the high power and speed of HP PA-RISC — all in an HP-UX environment.

The Model V743 processor can be ordered with three different memory configurations (32-, 64-, or 128-MB RAM). A C-size, 13-slot VXI mainframe is available for system configurations, with options including:

- dual 2.1-GB SE-SCSI hard disk drive modules
- SCSI-2 disk module, which includes a 1-GB hard disk drive (FW-SCSI) and a 21-MB floptical drive (SE-SCSI)
- data disk/DAT module, which includes a 2.1-GB hard disk drive (FW-SCSI) and a 4-GB DDS DAT drive
- analog-to-digital converter (10Msample/sec)
- 25.6-KHz 8-channel digitizer module
- digital signal processor module.

Peripheral Devices and Add-On Products

The TAC-4 peripheral devices and add-on products include the following components:

- CD-ROM drives
- Mass storage devices, including hard disk drives and RAID devices
- Tape drives, including 4- and 8-mm DAT
- Printers, including HP LaserJet 4 and 4Si, HP DeskJet 1200C, and dot matrix
- Pedestal-mount color monitors

- Color video cameras, scanners, and a video frame grabber
- Power devices, including surge and spike protectors
- Commercial racks and accessories.

Networking products include a variety of multiplexers, routers, and bridges. Communication interfaces include Ethernet and FDDI, MIL-STD-1553, IEEE-488, SCSI, MIL-STD-1397 (types A, B, C, H, D, and E), Centronics, ATM, ISDN, and RS-232C.

FOR MORE INFORMATION

The preferred source for additional information is Hewlett-Packard's **TAC-4 Help Desk**, which can be reached at the following toll-free number:

1-800-203-TAC4 (or 203-8224)

The Help Desk is available to all TAC-4 customers and is staffed with technical personnel who are knowledgeable about the TAC-4 contract and the products offered. HP recommends that you call the TAC-4 Help Desk to answer any pre- or post-sales questions you may have, or to discuss the suitability of TAC-4 products to meet your needs.

In addition to technical support, the TAC-4 Help Desk services include:

- ordering guide and newsletter requests
- pricing information
- product specifications
- configuration and ordering assistance
- warranty and service information
- delivery order status
- fax status for entitlement redemption sheets (password status for licensing software)
- product data sheets using the ***Fax-on-Demand*** system, which is available 24 hours per day, 7 days per week.

Other HP Points of Contact for TAC-4

The **TAC-4 Home Page** on the World Wide Web contains additional current information:

http://www.hp.com/go/tac4

You can also send e-mail to the following **TAC-4 Internet E-mail Address**:

hptac4@apollo.hp.com

For maintenance support issues, please send e-mail to:

hptac4oc@apollo.hp.com

You can also contact Hewlett-Packard's **TAC-4 Program Office** at the following address:

Hewlett-Packard Company
300 Apollo Drive
Chelmsford, MA 01824
ATTN: Walter Karpowski, TAC-4 Marketing Manager
Mailstop: CHR-01-FO

Government Points of Contact for TAC-4

Contracting Officer
(authorized to issue delivery orders)

David Berry
Naval Information Systems Management Center
(NISMC) CODE 022
Bldg 176, 5th Floor
Washington Navy Yard
Washington, DC 20374-5070

Phone (202) 433-7128
Fax (202) 433-6442
DSN 288-7128

Ordering Officer

Shawna Peterson
Naval Information Systems Management Center
(NISMC) CODE 022
Bldg 176, 5th Floor
Washington Navy Yard
Washington, DC 20374-5070

Phone (202) 433-4678
Fax (202) 433-6442
DSN 288-4678

Contract Specialist

Peggy Coberly
Naval Information Systems Management Center
(NISMC) CODE 022
Building 176, 5th Floor
Washington Navy Yard
Washington, DC 20374-5070

Phone (202) 433-4484

Requirements Officer

Michael D. Sessions
Space and Electronic Warfare (N62)
Office of the Chief of Naval Operations
Pentagon Room 5A734
Washington, DC 20350-2000

Phone (703) 697-3033

Contracting Officer's Technical Representative (COTR)

Douglas Romig
NCCOSC RDT&E Division (NRaD)
CODE 4103
49184 Transmitter Road
San Diego, CA 92152-7346

Phone (619) 553-4086, 4263, 4311
Fax (619) 553-6345
DSN 553-4086, 4263, 4311

Project Manager

Larry Core
NCCOSC RDT&E Division
CODE 4103
49184 Transmitter Road
San Diego, CA 92152-7346

Phone (619) 553-4085
Fax (619) 553-6605
DSN 553-4085

Contracting Officer's Security Representative (COSR)

P.A. Talley
Commanding Officer
NCCOSC RDTE DIV 0353
53560 Hull Street
San Diego, CA 92152-5001

Phone (619) 553-3195

2.0 CONFIGURATION AND ORDERING INFORMATION

This section discusses how to configure a system and place an order on the TAC-4 contract. Section 2.1 describes the basic configuration process and identifies where to get additional configuration assistance. Section 2.2 explains the ordering process and how to specify a configuration on the order form, including an example of a completed *TAC-4 Purchase List*.

2.1 HOW TO CONFIGURE A SYSTEM

This section describes how to configure a TAC-4 workstation or server. It discusses preconfigured system bundles, which can offer significant cost advantages over custom configurations with similar components. It also relates the configuration process and worksheets to the appropriate sections of the TAC-4 order forms.

The basic configuration process is as follows:

1. Review the preconfigured system bundles to determine if one meets your needs.
2. If none of the preconfigured system bundles meets your needs, review the *Custom Configuration Worksheets* in Appendix B to identify the base processor that comes closest to what you need.
3. Review the *Configuration Options Table* in Appendix A to select the desired options from those that are offered for the selected base processor.
4. Make a copy of the appropriate *Custom Configuration Worksheet* (from Appendix B) and fill in the base configuration and options.
5. Transfer the appropriate configuration information from the worksheet to the *TAC-4 Purchase List* (in Appendix C) to begin the order process.

NOTE:
For assistance with the configuration and ordering processes, please call the TAC-4 Help Desk at 1-800-203-TAC4 (or 203-8224).

Preconfigured System Bundles

Per the TAC-4 contract, Hewlett-Packard offers a variety of preconfigured system bundles which are orderable as single CLINs. These preconfigured system bundles offer an easy way to order a complete, fully integrated system, which is ready to use. Preconfigured workstation bundles typically include at least a floppy drive, hard disk, monitor, keyboard, and the standard operating system. These bundles can offer significant cost advantages over similar custom configurations based on the equivalent standalone components. The options available for the preconfigured system bundles are customer-installable. *Factory integration of the options is not available for preconfigured system bundles.*

The preconfigured system bundles designed for use in a typical office or laboratory environment are as follows:

Workstations	*CLIN*	*PAGE*
■ **Enhanced High-Performance Desktop Workstation,** based on the HP 9000 Model J210XC (1-MB Cache) with 64-MB RAM and 2-GB Hard Disk	♦**0013AB**	3.1-3
■ **High-Performance Desktop Workstation,** based on the HP 9000 Model J210 with 64-MB RAM and 1-GB Hard Disk	**0013AA**	3.1-4
■ **Medium-Performance Desktop Workstation**, based on the HP 9000 Model J210 with 32-MB RAM	**0015AA**	3.1-5
■ **C-Class Personal Workstation**, based on the HP 9000 Model C110 with 32-MB RAM	♦**0014AA**	3.1-8
■ **Low-Cost Workstation**, based on the HP 9000 Model 712/80 with 16-MB RAM	**0019AC**	3.1-10
Servers		
■ **Enhanced K-Class SMP Server**, based on the HP 9000 Model K420 with 128-MB RAM	♦**0015AD**	3.2-2
■ **K-Class SMP Server**, based on the HP 9000 Model K220 with 64-MB RAM	♦**0015AC**	3.2-3
■ **D-Class 2-Way SMP Server**, based on the HP 9000 Model D350 with 128-MB RAM	♦**0015AB**	3.2-6
■ **J-Class Deskside Server**, based on the HP 9000 Model J210 with 64-MB RAM	**0017AA**	3.2-8
■ **Low-Cost Workstation/Server**, based on the HP 9000 Model 712/100 with no RAM	♦**0020AA**	3.2-10

♦ *Represents a new CLIN.*

Please see the identified pages for full descriptions of these preconfigured system bundles. Refer to the *Configuration Options Table* in Appendix A for the customer-installable options for each base processor.

Custom Configurations

For TAC-4 customers with unique or task-specific requirements that are not met by a preconfigured system bundle, HP also offers the flexibility to specify a custom configuration to meet your individual needs.

To define a custom configuration, first determine the base processor that best fits your requirements in terms of speed, performance, main memory, and disk capacity. Use the *Workstation Summary* table below to make your initial selection. Then refer to the *Configuration Options* table in Appendix A for an overview of the options available and supported on the various processors.

Workstation Specification Summary

	Series 700			Series 700*i*		J-Class		C-Class
	712/60	**712/80**	**712/100**	**743*i*/64**	**743*i*/100**	**J210**	**J210XC**	**C110**
PA-RISC Processor	PA-7100LC	PA-7100LC	PA-7100LC	PA-7100LC	PA-7100LC	PA-7200	PA-7200	PA-7200
Clock Frequency (MHz)	60	80	100	64	100	120	120	120
Cache (Combined Data and Instruction)	64 KB	256 KB	256 KB	256 KB	256 KB	512 KB	2 MB	512 KB
Processors Supported	1	1	1	1	1	1 or 2	1 or 2	1
MIPS	73	92	125	77.7	121.8	176	176	176
MFLOPS	12.9	27.6	34	25.3	34.3	57		57
SPECint92	67.3	97.1	117.2	66.6	100.1	169	184	167
SPECfp92	87.3	123.3	144.2	96.5	137.0	271	306	269
SPECint95	1.67	3.25	2.89	1.9	2.89	4.37	4.64	4.41
SPECfp95	2.39	2.45	3.47	2.6	3.47	7.54	8.3	7.45
Main Memory Capacity	128 MB	128 MB	192 MB	256 MB	256 MB	1 GB	1 GB	512 MB
Disk Capacity (Internal)	2 GB	2 GB	2 GB	n/a	n/a	8 GB	8 GB	6 GB
EISA/GSC Slots	0	0	0	n/a	n/a	2 EISA/GSC and 2 EISA and 1 GSC	2 EISA/GSC and 2 EISA and 1 GSC	3 EISA/GSC and 1 GSC

After selecting a processor, make a copy of the appropriate *Custom Configuration Worksheet* from Appendix B, and fill in the required and optional components to specify your custom configuration. *Custom Configuration Worksheets* are available for the following base processors:

- HP Model C110 (CLINs 0028AA and 0028AB)
- HP Model J210XC (CLIN 0027AK)
- HP Model J210 (CLINs 0027AA and 0027AG)
- HP Model 712/100 (CLIN 0036AA)
- HP Model 712/80 (CLINs 0035AA, 0035AH, and 0035AJ)
- HP Model 743*i*/748*i* VMEbus (CLINs 0037AH – 0037AL)
- HP Model V743 VXIbus (CLINs 0038AA – 0038AD).

After completing the *Custom Configuration Worksheet*, transfer the information to the *TAC-4 Purchase List*, as explained in the next section. Before placing your order, please review your configuration with the TAC-4 COTR, Doug Romig, at (619) 553-4086, 4263 or 4311. He has access to the HP/TAC-4 Order Generation Software and can check your configuration for accuracy and completeness. Configuration and ordering assistance is also available from the TAC-4 Help Desk (1-800-203-TAC4). Please use these resources to validate your configuration and equipment list prior to submitting your order.

2.2 HOW TO PLACE AN ORDER

This section describes the process for placing an order for TAC-4 equipment. Please read this entire section to familiarize yourself with the process and appropriate forms. Reproducible copies of the necessary ordering forms are provided in Appendix C.

In general, ordering TAC-4 equipment requires three basic steps:

Step 1. Determine the products you wish to order.

Step 2. Fill out the required forms.

Step 3. Send the completed order package to the COTR.

Each of these steps is further defined below. Configuration and ordering assistance is also available from the TAC-4 Help Desk (1-800-203-TAC4).

Step 1. *Determine the products you wish to order.*

Section 3, *Commercial Hardware Products;* Section 4, *Tactical and Shipboard Products;* and Section 5.0 *Software Products*, describe most of the hardware and software products offered on the TAC-4 contract. Review these sections to familiarize yourself with the various products and systems available. Configure your order according to the instructions provided in Section 2.1. If necessary, call the TAC-4 Help Desk (1-800-203-TAC4) for further assistance or to speak with an HP sales representative, or contact the TAC-4 COTR for additional help with TAC-4 product selection.

Step 2. *Fill out the required forms.*

Reproducible copies of the order forms are included in Appendix C. These forms include:

- **TAC-4 Worksheet**
  This informational worksheet is required to facilitate processing of your TAC-4 equipment order. *(Note that this worksheet is different than the Custom Configuration Worksheet mentioned in Section 2.1.)*

- **TAC-4 Purchase List**
  This form is a delivery order summary that defines the configuration(s) being ordered *(see completed example on next page)*. Each configuration must contain the following:

  1. CLIN number/description
  2. Unit price
  3. Quantity
  4. Extended price
  5. Shipping address (one address per configuration)
  6. POC/phone number.

  Check each order to ensure that it produces one or more integrated systems, detailing those internal components that will make up each system. All standalone items must be detailed as separate from the configuration(s).

Procedure for Specifying a Configuration on the TAC-4 Purchase List

After determining the desired configuration and options, transfer that information to the *TAC-4 Purchase List* as shown in the previous example. For each workstation bundle, use the statements "**Begin configuration *N***" and "**End configuration *N***" to bracket all CLINs (hardware and software) associated with the system bundle *N*, where *N* is a sequential number (starting with 1) that you assign to distinguish workstation bundles. To indicate that you are ordering a quantity of a particular bundle, simply increase the quantities of all its component CLINs appropriately.

You may also include standalone items on the same order by using the statements "**Begin standalone products**" and "**End standalone products**" to bracket all CLINs not associated with a system configuration.

> ***NOTE:***
> *Except for the Preconfigured System Bundle CLINs,*
> *all hardware and software will be shipped as standalone CLINs*
> *unless the order is structured as described above.*

Please include an explanation of special configuration requirements such as partial or incomplete orders (for example, ordering systems without displays), or other ordering requirements. Please also indicate whether partial shipments are authorized. Any and all modifications to the original order may result in delayed delivery of your equipment.

To avoid delays in order processing, review your configuration(s) with the TAC-4 COTR, Doug Romig, at (619) 553-4086, 4263 or 4311 prior to submitting your order. He will use the HP/TAC-4 Order Generation Software to review your configuration for accuracy and completeness.

Example of a Completed TAC-4 Purchase List

TAC-4 Purchase List

Contract N68939-95-D-0004

NOTE: *You must create a separate Purchase List for each workstation configuration.*

Delivery Order Summary

COMMAND: NCCOSC RDT&E DIV
POC: Doug Romig, Code 4103
PHONE: (619) 553-4086, 4263, 4311
FAX: (619) 553-6345

Configuration # 1 Total: $ 7,650
Standalone Items Total: $ 7,599

DELIVERY ORDER TOTAL: $ 15,249

CLIN	Description	Price	Quantity Each	Extended Price
Begin configuration # 1				
0035AA	Low-Cost Desktop Workstation	$1,900	1	$1,900
0035AD	RAM expansion -- 64-MB	$2,721	1	$2,721
0055AC	1-GB hard disk drive (SE-SCSI)	$601	1	$601
0081AA	19-inch color monitor	$1,201	1	$1,201
0065AB	Keyboard type KB1	$76	1	$76
0067AD	Mouse and pad	$51	1	$51
0200AF	Three-User Standard OS	$900	1	$900
0205AA	C and Assembler SEE -- Single-User	$100	1	$100
0215AA	FORTRAN SEE -- Single-User	$100	1	$100
End configuration # 1				

Configuration # 1 Total: $ 7,650

Begin standalone products				
0063AA	LaserJet 4 Plus (Printer Type P1)	$2,351	3	$7,053
0063AB	Memory expansion -- 1-MB (for CLIN 0063AA)	$91	6	$546
End standalone products				

Standalone Items Total: $ 7,599

- **Navy-Specific Forms**

NAVCOMPT FORM 2276 (Funding Document)

Use this form to purchase hardware, software, and support services. Consult your command for further processing procedures. This form must be filled out completely and include the following information:

In block 11, include Naval Information Systems Management Center (NISMC).

In block 15, include reference to the TAC-4 contract and the Form 2275 reference document number.

Mail this form with the order package to NCCOSC RDTE DIV 4103.

NAVCOMPT FORM 2275

Use this form for transferring funding, as required.

A 4% surcharge (minimum $500) is required to support the Government contract administration and TAC program development, as specified by CNO Washington DC Naval Message MSG 0300012 FEB 95.

Only work requests will be acceptable; project orders will be rejected.

In block 9, include the POC and commercial phone number.

In block 10, include NCCOSC RDTE (NRaD) DIV 4103, San Diego, CA.

In block 14, include reference to the TAC-4 Contract Number, N68939-95-D-0004, and the Form 2276 document reference number.

- **Other DoD Activity Forms:**

DD Form 448 — Military Interdepartmental Purchase Request (MIPR)

DD Form 448-2 — Acceptance of MIPR

DD Form 1155 — Order for Supplies or Services

Step 3. *Send the completed ordering package to the COTR.*

After completing all of the required ordering forms (which include the TAC-4 Worksheet and TAC-4 Purchase List, as well as the appropriate NAVCOMPT and DD forms), send the package by Express Mail or Federal Express to the COTR at the following address:

Commanding Officer
NCCOSC RDT&E Division (NRaD), Code 4103
49184 Transmitter Road
San Diego, CA 92152-7346
Attn: Douglas Romig (COTR)
(619) 553-4086, 4263, 4311

Upon receipt of the ordering package, the COTR will verify the configuration(s) and sign an approval letter, including any special handling requirements. If needed, the COTR will contact the Technical POC designated on the form regarding any necessary changes.

The COTR will forward the order forms and appropriate documents to the Contracting Office. After verifying the order(s), the Contracting Officer will then complete and sign NAVCOMPT Form 2276 indicating acceptance of the funding. A signed copy will also be forwarded to the appropriate comptroller for that funding. The Contracting Officer will complete and sign the Order for Supplies or Services (DD Form 1155), which obligates the funds.

Finally, the Contracting Officer will issue the order to Hewlett-Packard.

Shipping and Delivery

For most items on the contract, standard delivery is 60 days from the date an official delivery order is issued to HP by the Contracting Officer. Hewlett-Packard provides quick-ship delivery of 30 days for most preconfigured system bundles and some custom configurations. While this quick-ship capability generally applies to the processors and integrated components, HP will endeavor to ship additional equipment on the delivery order within the same 30 days.

The normal delivery schedule for items ordered on the TAC-4 contract is as follows:

30-Days

- Some Custom Configurations (such as HP Models 712, J210, and 748*i)*
- Color Monitors
- Documentation
- Standalone Software

60-Days

- Preconfigured Series 700 and/or J-Class Workstations
- C-Class Workstations
- Portable Workstations
- HP 501/502 Application Servers
- X Terminals
- VXI Products
- Printers
- Encryption Products
- Power Conditioning Products
- Commercial Racks and Options

90-Days

- Preconfigured Racked Systems
- Tie-down Kits
- D-Class Servers
- K-Class Servers
- Rack Connectors
- SAIC Rugged Portable Workstations
- Rugged Expansion Chassis

120-Days

- Telos VME Portable Workstations
- Console Cabinets
- Rugged Large-Screen Displays
- Rugged Displays and Rack Components

Please call the TAC-4 Help Desk at 1-800-203-TAC4 for additional information regarding shipping and delivery.

This page was intentionally left blank
for double-sided reproduction.

3.0 COMMERCIAL HARDWARE PRODUCTS

This section describes the hardware products offered under the TAC-4 contract that are designed primarily for commercial environments, such as an office or laboratory. The hardware products designed specifically for shipboard and tactical environments are described in Section 4.0.

The TAC-4 hardware products for commercial environments are organized and described as follows:

		PAGE
3.1	**Workstations**	3.1-1
3.2	**Servers**	3.2-1
3.3	**Processors and Upgrades**	3.3-1
	3.3.1 VMEbus Board Computers and Components	3.3-2
	3.3.2 VXI Systems and Components	3.3-4
	3.3.3 Processor Modules	3.3-11
	3.3.4 RAM Expansion Modules	3.3-12
3.4	**Peripheral Products**	3.4-1
	3.4.1 CD-ROM Drives	3.4-2
	3.4.2 Graphics Cards and Controllers	3.4-4
	3.4.3 Keyboards, Trackballs, and Input Devices	3.4-14
	3.4.4 Mass Storage Devices	3.4-17
	3.4.5 Monitors and Display Devices	3.4-27
	3.4.6 Networking Products	3.4-30
	3.4.7 Office Power Devices	3.4-35
	3.4.8 Office Racks and Accessories	3.4-38
	3.4.9 Printers	3.4-40
	3.4.10 Video Products	3.4-43
	3.4.11 Miscellaneous Products	3.4-46

Highlights of the commercial products are presented on the following pages.

Workstations

The workstations offered on the TAC-4 contract include those based on the following processors:

- HP 9000 J-Class Model J210XC (♦)
- HP 9000 J-Class Model J210
- HP 9000 C-Class Model C110 (♦)
- HP 9000 Series 700 Model 712
- SAIC Galaxy Portable Workstation (♦)
- HP 748*i*/743*i*
- HP V743 (♦)

♦ *Represents a new CLIN.*

The **HP 9000 J-Class Workstation Model J210XC (♦)** is an enhanced, high-performance UNIX-based graphics workstation offering symmetric multiprocessing with optional dual 120MHz processors, each including a 2-MB cache (combined instruction and data). The HP Model J210XC workstation can be configured with:

- up to four 17- or 19-inch pedestal-mount color monitors (1280 x 1024)
- up to 1 GB of Error Checking and Correcting (ECC) RAM
- up to two internal 1-, 2-, and 4-GB hard disk drives (FW-SCSI)
- up to two removable media devices (which include 3.5- and 5.25-inch floppy disk drives, CD-ROM, 2-GB and 4-GB 4-mm DDS DAT, and 5-GB 8-mm tape drive — all single-ended SCSI)
- a keyboard plus mouse or trackball
- a second CPU (with 2-MB cache) for symmetric multiprocessing (*available through other acquisition means — please contact HP for further details*)
- UNIX operating system software.

The Model J210XC has one integrated LAN interface (IEEE 802.3/Ethernet) and supports IEEE 488, MIL-STD-1553B, MIL-STD-1397 (Type D, E, and parallel), FDDI, and ATM. It also supports an 8-port serial controller, VME bus extender, video frame grabber, EISA 100VG-AnyLAN, and a EISA X.25 Link with EISA communication boards.

The **HP 9000 J-Class Workstation Model J210** is a high-performance UNIX-based graphics workstation (120MHz CPU with 512-KB cache). The HP Model J210 workstation can be configured with:

- up to four 17- or 19-inch pedestal-mount color monitors (1280 x 1024)
- up to 1 GB of ECC RAM
- up to two internal 1-, 2-, and 4-GB hard disk drives (FW-SCSI)
- up to two removable media devices (which include 3.5- and 5.25-inch floppy disk drives, CD-ROM, 2-GB and 4-GB 4-mm DDS DAT, and 5-GB 8-mm tape drive — all single-ended SCSI)
- a keyboard plus mouse or trackball
- a second CPU (with 512-KB cache) for symmetric multiprocessing (*available through other acquisition means — please contact HP for further details*)
- UNIX operating system software.

The Model J210 has one integrated LAN interface (IEEE 802.3/Ethernet) and supports IEEE 488, MIL-STD-1553B, MIL-STD-1397 (Type D, E, and parallel), FDDI, and ATM. It also supports an 8-port serial controller, VME bus extender, video frame grabber, EISA 100VG-AnyLAN, and a EISA X.25 Link with EISA communication boards.

The **HP 9000 C-Class Model C110 Personal Workstation (♦)** brings the world's fastest graphics to the desktop in a new system package based on HP's high-performance PA-RISC processor. The C-class workstations are ideal for desktop users performing computational analysis, advanced 3D design, and compute- and memory-intensive processing workloads in engineering applications such as mechanical and electronic design automation; technical software development; geographic information systems; architecture, engineering and construction; and medical imaging.

The Model C110 offers the following notable features:

- 120-MHz PA-RISC 7200 with a 256-KB cache (combined instruction and data)
- up to 512 MB of ECC RAM with up to 8-way interleaving
- 2-GB and/or 4-GB internal hard disk drives (FW-SCSI)
- up to two internal removable media devices including a 3.5-inch floppy disk drive, a CD-ROM, or a 4-GB DAT drive
- external single-ended SCSI-2 port
- a keyboard plus mouse or trackball
- UNIX operating system software.

The Model C110 has one integrated LAN interface (IEEE 802.3/Ethernet) and supports IEEE 488, MIL-STD-1553B, MIL-STD-1397 (Type D, E, and parallel), FDDI, and ATM. It also supports an 8-port serial controller, VME bus extender, video frame grabber, EISA 100VG-AnyLAN, and a EISA X.25 Link with EISA communication boards.

The **HP 9000 Model 712 Low-Cost Workstation** offers a powerful UNIX-based desktop system. The Model 712 can be configured to include:

- a 17- or 19-inch pedestal-mount color monitor
- up to 128 MB of ECC RAM for the Model 712/80 and 192 MB of ECC RAM for the Model 712/100
- internal 1-GB or 2-GB hard disk drive (SE-SCSI)
- one internal 3.5-inch, 1.44-MB floppy disk drive
- one general I/O expansion slot
- a keyboard plus mouse or trackball
- DOS Windowing/Networking Environment
- UNIX operating system software.

The HP Model 712 has one integrated LAN interface (IEEE 802.3/Ethernet). Optional interfaces include a second serial port (RS-232C), an X.25 port, a second monitor port, and a second LAN AUI port.

The **Enhanced Portable Workstation (♦) (SAIC Galaxy)** includes the HP Model 712/80 processor. The Galaxy is fully software-compatible with the HP 9000 Model 700 workstation series. Features of the this portable workstation include:

- HP Model 712/80 PA-RISC 7100LC processor
- 10.4-inch active color matrix LCD (1024 x 768)
- ECC memory expandable to 128 MB
- 3.5-inch, 1.44-MB floppy disk drive
- internal 2-GB hard disk drive (SE-SCSI)
- IEEE 802.3/Ethernet interface
- trackball and three-button force pad
- DOS Windowing/Networking Environment
- UNIX operating system software.

Servers

The servers offered on the TAC-4 contract include those based on the following processors:

- HP 9000 K-Class Model K420 (♦)
- HP 9000 K-Class Model K220 (♦)
- HP 9000 D-Class Model D350 (♦)
- HP 501/502 Windows Application Servers (♦).

The **HP 9000 K-Class Model K420 Server (♦),** with its state-of-the-art design based on HP's PA-RISC 7200 technology, is powerful and highly expandable. This server represents a robust symmetric multiprocessing (SMP) implementation that offers unprecedented midrange performance and lasting value.

The Model K420 server offers a 10X performance range within a compact and affordable system cabinet. The true benefit of the sophisticated PA-7200 CPU design is the resulting simplicity of the K-Class system-level architecture. It is cost-effective, modular, easy to upgrade, reliable, and provides high commercial and technical performance.

The Model K420 server is ideally suited for general-purpose use in a technical environment such as data management applications, as an NFS server, or for off-loading analysis and software compilation. The Model K420 offers the following notable features:

- 120-MHz PA-RISC 7200 processor
- up to four-way symmetric multiprocessing
- 1-MB by 1-MB cache per CPU (combined instruction and data)
- up to 2-GB of ECC memory, with up to 32-way interleaving
- multi-channel I/O, ideal for disk mirroring
- up to 288-MB/second I/O throughput
- 960-MB/sec (peak) processor bus with split-read transaction for enhanced SMP scalability
- four HP-PB I/O slots and five HP-HSC slots
- four internal disk storage bays
- memory-mapped file system optimized for I/O-intensive relational database management applications
- UNIX operating system software (16-user license).

The **HP 9000 K-Class Model K220 Server** (♦) is also a powerful and highly expandable server offering. The Model K220 server offers the same 10X performance range within a compact and affordable system cabinet as the Model K420. With fewer expansion slots and reduced RAM, the K220 is more cost-effective, yet offers the same modularity, upgrade path, and reliability of the Model K420.

The Model K220 server is ideally suited for general-purpose use in a technical environment such as data management applications, as an NFS server, or for off-loading analysis and software compilation. The Model K220 offers the following notable features:

- 120-MHz PA-RISC 7200 processor
- up to four-way symmetric multiprocessing
- 1-MB by 1-MB cache per CPU (combined instruction and data)
- up to 1-GB ECC memory with up to 32-way interleaving
- multi-channel I/O, ideal for disk mirroring
- up to 288-MB/second I/O throughput
- 960-MB/sec (peak) processor bus with split-read transaction enhances SMP scalability
- four HP-PB I/O slots and one HP-HSC slot
- four internal fast-wide differential SCSI-2 disk storage bays
- memory-mapped file system optimized for I/O-intensive relational database management applications
- UNIX operating system software (16-user license).

The **HP 9000 D-Class Model D350 Server(♦)** is the newest member of the HP 9000 server family, providing 2-way SMP performance that rivals midrange servers. With capability for a 6X performance scalability range, coupled with I/O and processor expandability, all within a highly affordable system cabinet, the D-Class Server brings expandability and investment protection unseen in the low-end market. The Model D350 offers the following notable features:

- two-way symmetric multiprocessing
- up to 768 MB of ECC memory
- integrated 650-MB CD-ROM drive
- 20-MB fast-wide differential SCSI-2 disk channel
- eight I/O slots
- five internal hot-pluggable FW-SCSI disk drive bays.

The **HP 501 and HP 502 Windows Application Servers (♦)** provide a virtual PC window to any UNIX desktop. Users are presented with the exact look and feel of the UNIX applications and environment, with the performance of a dedicated PC. The HP 500 is a total system and is completely Open Systems compliant. The HP 500 offers the following notable features:

- single (HP 501) or dual (HP 502) 133-MHz Pentium processors
- 64 MB (HP 501) or 128 MB (HP 502) of RAM, expandable to 256 MB
- 3.5-inch floppy drive
- quad-speed (4X) CD-ROM drive
- 15-inch color console monitor
- PC-101 keyboard and 3-button mouse
- 1-GB (HP 501) or 2-GB (HP 502) internal hard disk drives (SE-SCSI)
- 15-user (HP 501) or 30-user (HP 502) license for HP 500 Server Software.

Specialized Processors

The specialized processors offered on the TAC-4 contract include the VMEbus single-board computers and the VXIbus computer system and components.

The **HP Model 743*i*** is a **VMEbus Single-Board Computer** that packs incredible performance into one 6U VMEbus slot. The Model 743*i* provides VME D64 master/slave capability for excellent throughput, with onboard ECC DRAM memory for correcting single-bit errors and detecting multi-bit errors. The Model 743*i* can be ordered as a VME single-board computer in two clock speeds (64 MHz and 100 MHz), as well as configured in the HP Model 748*i* system chassis.

The **HP Model V743 VXIbus Computer System (♦)** is a 100-MHz PA-7100LC processor that delivers extraordinary performance and direct access to the VXI backplane. The V743 computer was developed specifically as embedded HP-UX (UNIX) controllers for VXI, thereby providing the high I/O performance of direct VXI backplane support, the space savings of an embedded computer, and the high power and speed of HP PA-RISC — all in an HP-UX environment.

The Model V743 processor can be ordered with three different memory configurations (32-, 64-, or 128-MB RAM). A C-size, 13-slot VXI mainframe is available for system configurations, with options including:

- dual 2.1-GB SE-SCSI hard disk drive module
- SCSI disk module, which includes a 1-GB FW-SCSI hard disk drive and a 21-MB SE-SCSI floptical drive
- data disk/DAT module, which includes a 2.1-GB FW-SCSI hard drive and a 4-GB DDS DAT drive
- analog-to-digital converter (10Msample/sec)
- 25.6-KHz 8-channel digitizer module
- digital signal processor module.

Peripheral Products

The peripheral products offered on the TAC-4 contract include the following components:

- CD-ROM drives
- Mass storage devices, including hard disk drives and RAID devices
- Tape drives, including 4- mm DAT and 8-mm
- Printers, including the HP LaserJet 4 Plus and 4Si, HP DeskJet 1200C, and dot matrix
- Pedestal-mount color monitors
- Color video cameras, scanners, and video frame grabber
- Power devices including surge and spike protectors
- Commercial racks and accessories.

Networking products include a variety of multiplexers, routers, and bridges. Communication interfaces include Ethernet and FDDI, MIL-STD-1553, IEEE-488, SCSI, MIL-STD-1397 (types A, B, C, H, D, and E), Centronics, ATM, ISDN, and RS-232C.

3.1 WORKSTATIONS

This section describes the TAC-4 workstations that are designed primarily for commercial environments such as an office or laboratory. The TAC-4 workstations designed specifically for shipboard and tactical environments are described in Section 4.1, *Ruggedized Rack-Mounted Systems*.

The workstation CLINs in this section are organized as follows:

HP 9000 J-Class Workstations		*CLIN*	*PAGE*
■ Enhanced High-Performance Desktop Workstation Bundle (based on the HP Model J210XC)	☑	♦ 0013AB	3.1-3
■ High-Performance Desktop Workstation Bundle (based on the HP Model J210)	☑	0013AA	3.1-4
■ Medium Performance Desktop Workstation Bundle (based on the HP Model J210)	☑	0015AA	3.1-5
■ HP Model J210XC Workstation		♦ 0027AJ	3.1-6
■ HP Model J210 Workstation		0027AG	3.1-7
HP 9000 C-Class Workstations			
■ HP Model C110 Workstation Bundle (based on the HP Model C110)	☑	♦ 0014AA	3.1-8
■ HP Model C110 Workstation		♦ 0028AB	3.1-9
HP 9000 Series 700 Workstations			
■ HP Model 712/80 Workstation Bundle	☑	0019AC	3.1-10
■ HP Model 712/100 Workstation Bundle	☑	0020AA	3.1-11
■ HP Model 712/80		0035AJ	3.1-12
■ HP Model 712/100		0036AA	3.1-13
Modular VME Workstations			
■ HP Model 748*i*/64		0037AH	3.1-14
■ HP Model 748*i*/100		0037AK	3.1-15
Portable Workstations			
■ SAIC Galaxy Portable Workstation Bundle	☑	♦ 0021AG	3.1-16

☑ *Represents a Preconfigured System Bundle.*

♦ *Represents a new CLIN.*

These workstations may be ordered as preconfigured system bundles (designated with a ☑), as part of a user-defined or custom configuration designed to meet specific TAC-4 customer needs, or as standalone items.

Preconfigured system bundles provide an easy way to order a complete, fully integrated system which is ready to use. Preconfigured bundles can also offer significant cost advantages over custom configurations based on the equivalent components and options. The options available for the preconfigured system bundle processors are customer-installable. *Factory integration of options is not available for preconfigured system bundles.*

For TAC-4 customers with unique or task-specific requirements that are not met by a preconfigured system bundle, HP offers the flexibility to specify a custom configuration. Reproducible configuration worksheets for the base systems are available in Appendix B. These worksheets are designed to help you specify a custom configuration.

Section 2.1 describes the configuration process in more detail. Configuration assistance is also available by calling the TAC-4 Help Desk at 1-800-203-TAC4.

Enhanced High-Performance Desktop Workstation (J210XC) ☑♦CLIN 0013AB

Based on the HP 9000 Model J210XC, this CLIN offers enhancements over the High-Performance Desktop Workstation (CLIN 0013AA). With a high-performance PA-RISC processor and increased cache, the Model J210XC offers outstanding system performance in the same size desktop unit.

This high-performance personal workstation utilizes HP's industry-leading 2D graphics to meet the needs of those in Computer-Aided Engineering and Electronic Computer-Aided Design. It is especially suitable for computational analysis, advanced two-dimensional design work, and memory-intensive workloads.

The J210XC is designed for future expandability to protect customer investment.

Items Included in this Bundle

Items Included in this Bundle	CLIN
• HP 9000 Model J210XC with 64-MB RAM	0027AH
• 2-GB Fixed Hard Disk	0055AF
• 3.5" Floppy Disk Drive	0047AA
• CD-ROM Drive	0049AA
• Keyboard	0065AB
• Mouse and Pad	0067AD
• 19" Pedestal-mount Color Monitor	0081AA
• VISUALIZE-8 Graphics Subsystem	0092AB
• Standard OS (HP-UX 2-User License)	0200AC
• Technical Manuals	NSP*
• LaserROM CD Electronic Documentation	NSP*

* *Not Separately Priced*

Features

- 120-MHz PA-RISC 7200 Processor
- 2-MB Cache (Combined Instruction and Data)
- 184 SPECint92, 306 SPECfp92
- 4640 SPECrate_int92, 8300 SPECrate_fp92
- Uniprocessor upgradeable to 2-Way SMP
- ECC RAM Expandable to 1 GB
- 16 Memory SIMM Slots
- Maximum of Two Internal SE-SCSI Removable Media Devices
- Maximum of Two Internal FW-SCSI Fixed Hard Disk Drives
- PS/2 Ports for Standard PC Keyboard and Mouse
- Two Asynchronous RS-232C Serial Ports
- Centronics-compatible Parallel Printer Port
- Two EISA, One GSC, and Two EISA/GSC Slots
- IEEE 802.3 LAN Interface (AUI or UTP)
- External SE-SCSI and FW-SCSI Connectors
- 16-bit Stereo Audio Input/Output
- Auto-selecting Power Supply (115v/230v)

Comments/Special Instructions

This Preconfigured System Bundle is designed for the Commercial environment. Refer to the ***Configuration Options Table*** in Appendix A for the customer-installable options for this processor. See also CLINs 0027AH and 0027AJ for additional configuration options based on the HP Model J210XC.

High-Performance Desktop Workstation (Model J210) ☑ CLIN 0013AA

Based on the HP 9000 Model J210 workstation, this CLIN presents the best features of HP high-performance PA-RISC processors in a new system package. The Model J210 provides no-compromise, full computing power for unequaled system performance in technical and scientific software applications.

This high-performance personal workstation utilizes HP's industry-leading 2D graphics to meet the needs of those in Computer-Aided Engineering and Electronic Computer-Aided Design. It is especially suitable for computational analysis, advanced two-dimensional design work, and memory-intensive workloads.

The Model J210 is designed for future expandability to protect customer investment.

Items Included in this Bundle	*CLIN*
• HP 9000 Model J210 with 64-MB RAM	0027AA
• 1-GB Fixed Hard Disk	0055AD
• 3.5" Floppy Disk Drive	0047AA
• 2-GB 4-mm DAT Drive	0061AC
• Keyboard	0065AB
• Trackball	0067AE
• 19" Pedestal-mount Color Monitor	0081AA
• Single-Output 2D Graphics (G1)	0091AB
• Standard OS (HP-UX 2-User License)	0200AC
• Technical Manuals	NSP*
• LaserROM CD Electronic Documentation	NSP*

* *Not Separately Priced*

Features

- 120-MHz PA-RISC 7200 Processor
- 512-KB Cache (Combined Instruction and Data)
- 169 SPECint92, 271 SPECfp92
- 4370 SPECrate_int92, 7540 SPECrate_fp92
- Uniprocessor upgradeable to 2-Way SMP
- ECC RAM Expandable to 1 GB
- 16 Memory SIMM Slots
- Maximum of Two Internal SE-SCSI Removable Media Devices
- Maximum of Two Internal FW-SCSI Fixed Hard Disk Drives
- PS/2 Ports for Standard PC Keyboard and Mouse
- Two Asynchronous RS-232C Serial Ports
- Centronics-compatible Parallel Printer Port
- Two EISA, One GSC, and Two EISA/GSC Slots
- IEEE 802.3 LAN Interface (AUI or UTP)
- External SE-SCSI and FW-SCSI Connectors
- 16-bit Stereo Audio Input/Output
- Auto-selecting Power Supply (115v/230v)

Comments/Special Instructions

This Preconfigured System Bundle is designed for the White environment. Refer to the ***Configuration Options Table*** in Appendix A for the customer-installable options for this processor. CLINs 0015AA, 0017AA, 0027AA, and 0027AG offer additional configuration options based on the HP 9000 Model J210.

Medium-Performance Desktop Workstation (Model J210) ☑ CLIN 0015AA

Also based on the HP 9000 Model J210 workstation, this CLIN is identical to the High-Performance Desktop Workstation (CLIN 0013AA) except that it is configured with 32 MB of RAM. This configuration presents the best features of HP high-performance PA-RISC processors in a compact desktop or deskside package. The J210 provides no-compromise, full computing power for unequaled system performance in technical and scientific software applications.

This high-performance personal workstation utilizes HP's industry-leading 2D graphics to meet the needs of those in Computer-Aided Engineering and Electronic Computer-Aided Design. It is especially suitable for computational analysis, advanced two-dimensional design work, and memory-intensive workloads.

The J210 is designed for future expandability to protect customer investment.

Items Included in this Bundle

Items Included in this Bundle	CLIN
• HP 9000 Model J210 with 32-MB RAM	0029AA
• 1-GB Fixed Hard Disk	0055AD
• 3.5" Floppy Disk Drive	0047AA
• 2-GB 4-mm DAT Drive	0061AC
• Keyboard	0065AB
• Trackball	0067AE
• 19" Pedestal-mount Color Monitor	0081AA
• Single-Output 2D Graphics (G1)	0091AB
• Standard OS (HP-UX 2-User License)	0200AC
• Technical Manuals	NSP*
• LaserROM CD Electronic Documentation	NSP*

* *Not Separately Priced*

Features

- 120-MHz PA-RISC 7200 Processor
- 512-KB Cache (Combined Instruction and Data)
- 169 SPECint92, 271 SPECfp92
- 4370 SPECrate_int92, 7540 SPECrate_fp92
- Uniprocessor upgradeable to 2-Way SMP
- ECC RAM Expandable to 1 GB
- 16 Memory SIMM Slots
- Maximum of Two Internal SE-SCSI Removable Media Devices
- Maximum of Two Internal SCSI-3 Fixed Hard Disk Drives
- PS/2 Ports for Standard PC Keyboard and Mouse
- Two Asynchronous RS-232C Serial Ports
- Centronics-compatible Parallel Printer Port
- Two EISA, One GSC, and Two EISA/GSC Slots
- IEEE 802.3 LAN Interface (AUI or UTP)
- External SE-SCSI and FW-SCSI Connectors
- 16-bit Stereo Audio Input/Output
- Auto-selecting Power Supply (115v/230v)

Comments/Special Instructions

This Preconfigured System Bundle is designed for the White environment. Refer to the ***Configuration Options Table*** in Appendix A for the customer-installable options for this processor. CLINs 0013AA, 0017AA, 0027AA, and 0027AG offer additional configuration options based on the Model J210.

HP Model J210XC Workstation ♦CLIN 0027AJ

With a high-performance PA-RISC processor and a 2-MB cache, the Model J210XC offers outstanding system performance in technical and scientific applications.

This high-performance personal workstation utilizes HP's industry-leading 2D graphics to meet the needs of those in Computer-Aided Engineering and Electronic Computer-Aided Design. It is especially suitable for computational analysis, advanced two-dimensional design work, and memory-intensive workloads.

The Model J210XC is designed for future expandability to protect customer investment.

Shown here with optional color monitor, keyboard and mouse

Items Included in this CLIN

• HP 9000 Model J210XC with 128-MB RAM	NSP*
• Standard OS (HP-UX 2-User License)	0200AC
• Technical Manuals	NSP*
• LaserROM CD Electronic Documentation	NSP*

* *Not Separately Priced*

Options

- *Please see the* ***Configurations Option Table*** *in Appendix A.*

Features

- 120-MHz PA-RISC 7200 Processor
- 2-MB Cache (Combined Instruction and Data)
- 184 SPECint92, 306 SPECfp92
- 4640 SPECrate_int92, 8300 SPECrate_fp92
- Uniprocessor upgradeable to 2-Way SMP
- ECC RAM Expandable to 1 GB
- 16 Memory SIMM Slots
- Maximum of Two Internal SE-SCSI Removable Media Devices
- Maximum of Two Internal FW-SCSI Fixed Hard Disk Drives
- PS/2 Ports for Standard PC Keyboard and Mouse
- Two Asynchronous RS-232C Serial Ports
- Centronics-compatible Parallel Printer Port
- Two EISA, One GSC, and Two EISA/GSC Slots
- IEEE 802.3 LAN Interface (AUI or UTP)
- External SE-SCSI and FW-SCSI Connectors
- 16-bit Stereo Audio Input/Output
- Auto-selecting Power Supply (115v/230v)

Comments/Special Instructions

This CLIN is designed for the Commercial environment. A reproducible ***Custom Configuration Worksheet*** is available in Appendix B to facilitate custom configurations based on this processor. See also CLIN 0013AB, which is a Preconfigured System Bundle based on the Model J210XC.

Note: *This CLIN (0027AJ) includes 128-MB RAM. To order this same configuration with 64-MB RAM installed, order* ***♦ CLIN 0027AH****.*

HP Model J210 Workstation — CLIN 0027AG

The HP 9000 Model J210 workstation presents the best features of the high-performance PA-RISC processor. The Model J210 provides no-compromise, full computing power for unequaled system performance in technical and scientific software applications.

This high-performance personal workstation utilizes HP's industry-leading 2D graphics to meet the needs of those in Computer-Aided Engineering and Electronic Computer-Aided Design. It is especially suitable for computational analysis, advanced two-dimensional design work, and memory-intensive workloads.

The Model J210 is designed for future expandability to protect customer investment.

Shown here with optional color monitor, keyboard and mouse

Items Included in this CLIN

• HP 9000 Model J210 with 128-MB RAM	NSP*
• Standard OS (HP-UX 2-User License)	0200AC
• Technical Manuals	NSP*
• LaserROM CD Electronic Documentation	NSP*

* *Not Separately Priced*

Options

- *Please see the* ***Configurations Option Table*** *in Appendix A.*

Features

- 120-MHz PA-RISC 7200 Processor
- 512-KB Cache (Combined Instruction and Data)
- 169 SPECint92, 271 SPECfp92
- 4370 SPECrate_int92, 7540 SPECrate_fp92
- Uniprocessor upgradeable to 2-Way SMP
- ECC RAM Expandable to 1 GB
- 16 Memory SIMM Slots
- Maximum of Two Internal SE-SCSI Removable Media Devices
- Maximum of Two Internal FW-SCSI Fixed Hard Disk Drives
- PS/2 Ports for Standard PC Keyboard and Mouse
- Two Asynchronous RS-232C Serial Ports
- Centronics-compatible Parallel Printer Port
- Two EISA, One GSC, and Two EISA/GSC Slots
- IEEE 802.3 LAN Interface (AUI or UTP)
- External SE-SCSI and FW-SCSI Connectors
- 16-bit Stereo Audio Input/Output
- Auto-selecting Power Supply (115v/230v)

Comments/Special Instructions

This CLIN is designed for the White environment. A reproducible ***Custom Configuration Worksheet*** is available in Appendix B to facilitate custom configurations based on this processor. See also CLINs 0013AA, 0015AA, and 0017AA which are Preconfigured System Bundles based on the Model J210.

Note: *This CLIN (0027AG) includes 128-MB RAM. To order this same configuration with 64-MB, order* ***CLIN 0027AA.***

C-Class Personal Workstation (Model C110)

☑ ♦CLIN 0014AA

The HP 9000 C-Class Model C110 brings the world's fastest graphics to the desktop in a new system package based on HP's high-performance PA-RISC processors. These workstations provide no-compromise, full computing power for unequaled system performance in technical and design applications.

The highly expandable C-Class personal workstations utilize HP's industry-leading 2D and 3D graphics to meet the needs of those in Computer-Aided Engineering and Electronic Computer-Aided Design. They are especially suitable for advanced 3D design and memory-intensive workloads.

The C-Class workstations are also upgradable to HP's PA8000 processor, ensuring years of performance upgrades and protecting customer investment.

Items Included in this Bundle	*CLIN*
• HP 9000 Model C110 Base System with 32-MB RAM	0028AA
• 2-GB Fixed Hard Disk Drive	0028AG
• CD-ROM Drive	0028AF
• 3.5" Floppy Disk Drive	0028AE
• Keyboard	0065AB
• Mouse and Pad	0067AD
• 17" Pedestal-mount Color Monitor	0080AA
• Color Graphics Subsystem	0091AE
• Standard OS (HP-UX 2-User License)	0200AC
• Technical Manuals	NSP*
• LaserROM CD Electronic Documentation	NSP*

* *Not Separately Priced*

Features

- 120-MHz PA-RISC 7200 Processor
- 256-KB Cache (Combined Instruction and Data)
- 167 SPECint92, 269 SPECfp92
- ECC RAM Expandable to 512 MB
- Eight Memory SIMM Slots
- Maximum of Two Internal SE-SCSI Removable Media Devices
- Maximum of Two Internal FW-SCSI Fixed Hard Disk Drives
- Two Asynchronous RS-232C Serial Ports
- Centronics-compatible Parallel Printer Port
- One GSC and Three EISA/GSC Expansion Slots
- IEEE 802.3 LAN Interface (AUI or UTP)
- External Single-Ended SCSI-2 Port
- PS/2 Ports for Standard PC Keyboard and Mouse
- 16-bit Stereo Audio Input/Output
- Auto-selecting Power Supply (115v/230v)

Comments/Special Instructions

This Preconfigured System Bundle is designed for the Commercial environment. Refer to the ***Configuration Options Table*** in Appendix A for the customer-installable options for this processor. See also CLIN 0028AB for additional configuration options based on the Model C110.

HP Model C110 Workstation ♦CLIN 0028AB

The HP 9000 C-Class Model C110 brings the world's fastest graphics to the desktop in a new system package based on HP's high-performance PA-RISC processors. These workstations provide no-compromise, full computing power for unequaled system performance in technical and design applications.

The highly expandable C-Class personal workstations utilize HP's industry-leading 2D and 3D graphics to meet the needs of those in Computer-Aided Engineering and Electronic Computer-Aided Design. They are especially suitable for advanced 3D design and memory-intensive workloads.

The C-Class workstations are also upgradeable to HP's PA8000 processor, ensuring years of performance upgrades and protecting customer investment.

Shown here with optional color monitor, keyboard and mouse

Items Included in this CLIN

• HP 9000 Model C110 Base System with 128-MB RAM Installed	NSP*
• Standard OS (HP-UX 2-User License)	0200AC
• Technical Manuals	NSP*
• LaserROM CD Electronic Documentation	NSP*

* *Not Separately Priced*

Options

- *Please see the* ***Configurations Option Table*** *in Appendix A.*

Features

- 120-MHz PA-RISC 7200 Processor
- 512-KB Cache (Combined Instruction and Data)
- 167 SPECint92, 269 SPECfp92
- ECC RAM Expandable to 512 MB
- Eight Memory SIMM Slots
- Maximum of Two Internal SE-SCSI Removable Media Devices
- Maximum of Two Internal FW-SCSI Fixed Hard Disk Drives
- Two Asynchronous RS-232C Serial Ports
- Centronics-compatible Parallel Printer Port
- One GSC and Three EISA/GSC Expansion Slots
- IEEE 802.3 LAN Interface (AUI or UTP)
- External Single-Ended SCSI-2 Port
- PS/2 Ports for Standard PC Keyboard and Mouse
- 16-bit Stereo Audio Input/Output
- Auto-selecting Power Supply (115v/230v)

Comments/Special Instructions

This CLIN is designed for the Commercial environment. A reproducible ***Custom Configuration Worksheet*** is available in Appendix B to facilitate custom configurations based on this processor. See also CLIN 0014AA, which is a Preconfigured System Bundle based on the Model C110.

Note: *This CLIN (0028AB) includes 128-MB RAM installed. To order this same configuration with 32-MB RAM installed, order* ***♦CLIN 0028AA****.*

Low-Cost Workstation (Model 712/80)

☑ **CLIN 0019AC**

Among high-performance, entry-level desktop workstations, the HP 9000 Model 712/80 features a unique combination of price/performance, ease of use, and network functionality ideally suited for today's computing challenges. Using the HP PA-RISC 7100LC processor running at 80-MHz, the Model 712/80 offers unequaled performance for its price. High-performance graphics, as well as superb integer performance, make this workstation an excellent tool for design, development, and analytical work. It is also the workstation of choice for applications that require fast X Window System performance and low-cost 2D wireframe color graphics.

The Model 712/80 is designed for simple installation, expansion, and serviceability. Featuring plug-in memory modules and disks, it is as easy to configure as stereo components.

Shown here with optional mass storage devices

Items Included in this Bundle

Items Included in this Bundle	CLIN
• HP 9000 Model 712/80 with 16-MB RAM	0035AA
• 1-GB Fixed Hard Disk	0055AC
• 3.5" Floppy Disk Drive	0047AB
• Keyboard	0065AB
• Trackball	0067AE
• 17" Pedestal-mount Color Monitor	0080AA
• Standard OS (HP-UX 2-User License)	0200AC
• DOS Windowing/Networking Environment, Single-User License	0475AA
• Technical Manuals	NSP*
• LaserROM CD Electronic Documentation	NSP*

* *Not Separately Priced*

Features

- 80-MHz PA-RISC 7100LC Processor
- 256-KB Cache (Combined Instruction and Data)
- 97.1 SPECint92, 123.3 SPECfp92
- ECC RAM Expandable to 128 MB
- Four Memory SIMM Slots
- On-board graphics
- One Asynchronous RS-232C Serial Port
- Centronics-compatible Parallel Printer Port
- External Single-ended SCSI-2 Port
- General Expansion slot
- PS/2 Ports for Standard PC Keyboard and Mouse
- IEEE 802.3 LAN Interface (AUI or UTP)
- 16-bit Stereo Audio Input/Output
- Auto-selecting Power Supply (115v/230v)

Comments/Special Instructions

This Preconfigured System Bundle is designed for the White environment. Refer to the ***Configuration Options Table*** in Appendix A for the customer-installable options for this processor. CLINs 0035AA, 0035AH, and 0035AJ offer additional configuration options based on the Model 712/80.

Note: *This CLIN (0019AC) includes a 17" monitor. to order the same configuration with a 14" monitor (CLIN 0079AA), order* ☑ ***CLIN 0019AB***.

Low-Cost Workstation (Model 712/100)

☑ CLIN 0020AA

Among high-performance, entry-level desktop workstations, the HP 9000 Model 712/100 features a unique combination of price/performance, ease of use, and network functionality ideally suited for today's computing challenges. Using the HP PA-RISC 7100LC processor running at 100 MHz, the Model 712/100 offers unequaled performance for its price. High-performance graphics, as well as superb integer performance, make this workstation an excellent tool for design, development, and analytical work. It is also the workstation of choice for applications that require fast X Window System performance and low-cost 2D wireframe color graphics.

The Model 712/100 is designed for simple installation, expansion, and serviceability. Featuring plug-in memory modules and disks, it is as easy to configure as stereo components.

Shown here with optional mass storage devices

Items Included in this Bundle

Items Included in this Bundle	CLIN
• HP 9000 Model 712/100 with no RAM	0036AA
• 1-GB Fixed Hard Disk	0055AC
• 3.5" Floppy Disk Drive	0047AB
• Keyboard	0065AB
• Trackball	0067AE
• 17" Pedestal-mount Color Monitor	0080AA
• Standard OS (HP-UX 2-User License)	0200AC
• DOS Windowing/Networking Environment, Single-User License	0475AA
• Technical Manuals	NSP*
• LaserROM CD Electronic Documentation	NSP*

* *Not Separately Priced*

Features

- 100-MHz PA-RISC 7100LC Processor
- 256-KB Cache (Combined Instruction and Data)
- 117.2 SPECint92, 144.2 SPECfp92
- ECC RAM Expandable to 192 MB
- Four Memory SIMM Slots
- On-board graphics
- One Asynchronous RS-232C Serial Port
- Centronics-compatible Parallel Printer Port
- External Single-ended SCSI-2 Port
- General Expansion slot
- PS/2 Ports for Standard PC Keyboard and Mouse
- IEEE 802.3 LAN Interface (AUI or UTP)
- 16-bit Stereo Audio Input/Output
- Auto-selecting Power Supply (115v/230v)

Comments/Special Instructions

This Preconfigured System Bundle is designed for the White environment. Refer to the ***Configuration Options Table*** in Appendix A for the customer-installable options for this processor. CLIN 0036AA offers additional configuration options based on the Model 712/100.

HP Model 712/80 Workstation — CLIN 0035AJ

Among high-performance, entry-level desktop workstations, the HP 9000 Model 712/80 features a unique combination of price/performance, ease of use, and network functionality ideally suited for today's computing challenges. High-performance graphics, as well as superb integer performance, make this workstation an excellent tool for design, development, and analytical work. It is also the workstation of choice for applications that require fast X Window System performance and low-cost 2D wireframe color graphics.

The Model 712/80 is designed for simple installation, expansion, and serviceability. Featuring plug-in memory modules and options, it is as easy to configure as stereo components.

Shown here with optional color monitor, keyboard, mouse, and mass storage devices

Items Included in this CLIN

• HP 9000 Model 712/80 with 64-MB RAM	NSP*
• Standard OS (HP-UX 2-User License)	0200AC
• Technical Manuals	NSP*
• LaserROM CD Electronic Documentation	NSP*

* *Not Separately Priced*

Options

• 8-MB RAM Expansion	0035AB
• 16-MB RAM Expansion	0035AC
• 32-MB RAM Expansion	0035AG
• 64-MB RAM Expansion	0035AD
• 3.5" Floppy Disk Drive	0047AB
• 1-GB Internal Fixed Hard Disk	0055AC
• 2-GB Internal Fixed Hard Disk	0055AH

- *See also the **Configuration Options Table** in Appendix A.*

Features

- 80-MHz HP PA-RISC 7100LC Processor
- 256-KB Cache (Combined Instruction and Data)
- 97.1 SPECint92, 123.3 SPECfp92
- ECC RAM Expandable to 128 MB
- Six Memory SIMM Slots
- On-board Graphics
- One Asynchronous RS-232C Serial Port
- Centronics-compatible Parallel Printer Port
- External Single-ended SCSI-2 Port
- General Expansion slot
- PS/2 Ports for Standard PC Keyboard and Mouse
- IEEE 802.3 LAN Interface (AUI or UTP)
- 16-bit Stereo Audio Input/Output
- Auto-selecting Power Supply (115v/230v)

Comments/Special Instructions

This CLIN is designed for the White environment. A reproducible ***Custom Configuration Worksheet*** is available in Appendix B to facilitate custom configurations based on this processor. See also CLINs 0019AB and 0019AC, which are Preconfigured System Bundles based on the Model 712/80.

Note: *This CLIN (0035AJ) includes 64-MB RAM. To order this same processor with 32-MB RAM installed, order **CLIN 0035AH**. For this same configuration with 16-MB RAM installed, order **CLIN 0035AA**.*

HP Model 712/100 Workstation ♦CLIN 0036AA

This HP 9000 Model 712/100 *with no RAM installed* is the ideal base system for configuring a customized low-cost workstation or server. It features the same great ease of use and network functionality described in CLIN0035AA, with even better price/performance. The Model 712/100 also includes high-performance graphics and superb integer performance, making this workstation an excellent tool for design, development, and analytical work.

The Model 712/100 is designed for simple installation, expansion, and serviceability. Featuring plug-in memory modules and options, it is as easy to configure as stereo components.

Shown here with optional color monitor, keyboard, mouse, and mass storage devices

Items Included in this CLIN

- HP 9000 Model 712/100 *without RAM* — NSP*
- Standard OS (HP-UX 2-User License) — 0200AC
- Technical Manuals — NSP*
- LaserROM CD ElectronicDocumentation — NSP*

* *Not Separately Priced*

Options

- 8-MB RAM Expansion — 0035AB
- 16-MB RAM Expansion — 0035AC
- 32-MB RAM Expansion — 0035AG
- 64-MB RAM Expansion — 0035AD
- 3.5" Floppy Disk Drive — 0047AB
- 1-GB Fixed Hard Disk — 0055AC
- 2-GB Fixed Hard Disk — 0055AH
- *See also the* ***Configuration Options Table*** *in Appendix A.*

Features

- 100-MHz HP PA-RISC 7100LC Processor
- 256-KB Cache (Combined Instruction and Data)
- 117.2 SPECint92, 144.2 SPECfp92
- ECC RAM Expandable to 192 MB
- Six Memory SIMM Slots
- On-board Graphics
- One Asynchronous RS-232C Serial Port
- Centronics-compatible Parallel Printer Port
- External Single-ended SCSI-2 Port
- General Expansion slot
- PS/2 ports for Standard PC Keyboard and Mouse
- IEEE 802.3 LAN Interface (AUI or UTP)
- 16-bit Stereo Audio Input/Output
- Auto-selecting Power Supply (115v/230v)

Comments/Special Instructions

This CLIN is designed for the White environment. A reproducible ***Custom Configuration Worksheet*** is available in Appendix B to facilitate custom configurations based on this processor. See also CLIN 0020AA, which is a Preconfigured System Bundle based on the Model 712/100.

HP Model 748*i*/64 Workstation — CLIN 0037AH

The Model 748*i*/64 is a VMEbus system that uses and builds upon the Model 743*i*/64 VMEbus single-board computer. As a result, the Model 748*i*/64 offers the power and performance of the industry-leading VMEbus technology, plus additional flexibility and features especially important for sensory-based data acquisition and display applications.

The Model 748*i*/64 features flexible I/O capability, with eight VMEbus expansion slots (two slots used by the Model 743*i*), four EISA expansion slots, and integrated HP-HIL for optional keyboard interface or other HP-HIL devices. The Model 748*i*/64 also offers flexibility by enabling you to place the entire system wherever needed, with three rack-mounting configurations, plus wall mounting and direct modular access for streamlined service. Individual modules may be pulled out for service and tucked back into place in less than five minutes. Removable media devices can be placed either in the front or back of the unit.

The Model 748*i*/64 is suitable for many harsh applications. Its overall size, 310.1mm high × 425.0mm wide × 412.6mm deep (12.22 × 16.75 × 16.24 inches), leaves plenty of room for other equipment and fits into a standard 19-inch rack.

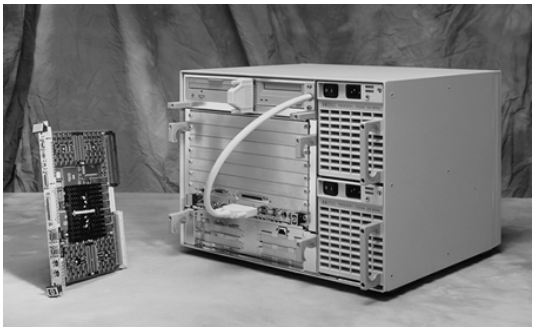

This photo shows a second Model 743i VMEbus Board Computer next to the Model 748i VMEbus Chassis.

Items Included

Items Included	CLIN
• HP 9000 Model 743i/64 with 64-MB RAM	NSP*
• On-Board 8-Plane Graphics	NSP*
• 1-GB Fixed Hard Disk Drive	0055AC
• Standard OS (HP-UX 2-User License)	0200AC
• Real-Time OS License	0200AE
• Adapter Cables	NSP*
• Technical Manuals	NSP*
• LaserROM CD Electronic Documentation	NSP*

* *Not Separately Priced*

Features

- 64-MHz HP PA-RISC 7100LC Processor
- 256-KB Cache (Combined Instruction and Data)
- 66.6 SPECint92, 96.5 SPECfp92
- ECC RAM Expandable to 256 MB
- Two Asynchronous RS-232C Serial Ports
- Centronics-compatible Parallel Printer Port
- External Single-Ended SCSI-2 Port
- PS/2 ports for Standard PC Keyboard and Mouse
- IEEE 802.3 LAN Interface
- 16-bit Stereo Audio Input/Output
- Auto-selecting Power Supply (115v/230v)

Options

Options	
• 32-MB RAM Expansion	0037AM
• 64-MB RAM Expansion	0037AN

- *See also the* ***Configuration Options Table*** *in Appendix A.*

Comments/Special Instructions

This CLIN is designed for the White environment. Refer to the reproducible ***Custom Configuration Worksheet*** in Appendix B or call the TAC-4 Help Desk for configuration assistance.

Note: *This CLIN (0037AH) includes on-board 8-plane color graphics. To order the same configuration without the on-board graphics, order* ***CLIN 0037AJ****.*

HP Model 748*i*/100 Workstation — CLIN 0037AK

The Model 748*i*/100 is a VMEbus system that uses and builds upon the Model 743*i*/100 VMEbus single-board computer. As a result, the Model 748*i*/100 offers the power and performance of the industry-leading VMEbus technology, plus additional flexibility and features especially important for sensory-based data acquisition and display applications.

The Model 748*i*/100 features flexible I/O capability, with eight VMEbus expansion slots (two slots used by the Model 743*i*), and four EISA expansion slots.

The Model 748*i*/100 also offers flexibility by enabling you to place the entire system wherever needed, with three rack-mounting configurations, plus wall mounting and direct modular access for streamlined service. Individual modules may be pulled out for service and tucked back into place in less than five minutes. Removable media devices can be placed either in the front or back of the unit.

The Model 748*i*/100 is suitable for many harsh applications. Its overall size, 310.1mm high × 425.0mm wide × 412.6mm deep (12.22 × 16.75 × 16.24 inches), leaves plenty of room for other equipment and fits into a standard 19-inch rack.

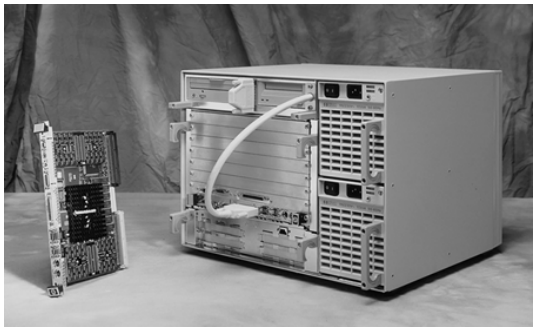

This photo shows the Model 743i VMEbus Board next to the Model 748i VMEbus Chassis.

Items Included

Items Included	CLIN
• HP 9000 Model 748*i*/100 with 64-MB RAM	NSP*
• On-Board 8-Plane Graphics	NSP*
• 1-GB Fixed Hard Disk Drive	0055AC
• Standard OS (HP-UX 2-User License)	0200AC
• Real-Time OS License	0200AE
• Adapter Cables	NSP*
• Technical Manuals	NSP*
• LaserROM CD Electronic Documentation	NSP*

* *Not Separately Priced*

Features

- 100-MHz HP PA-RISC 7100LC Processor
- 256-KB Cache (Combined Instruction and Data)
- 100.1 SPECint92, 137.0 SPECfp92
- ECC RAM Expandable to 256 MB
- Two Asynchronous RS-232C Serial Ports
- Centronics-compatible Parallel Printer Port
- External Single-Ended SCSI-2 Port
- PS/2 ports for Standard PC Keyboard and Mouse
- IEEE 802.3 LAN Interface (AUI or UTP)
- 16-bit Stereo Audio Input/Output
- Auto-selecting Power Supply (115v/230v)

Options

Options	
• 32-MB RAM Expansion	0037AM
• 64-MB RAM Expansion	0037AN

- *See also the* ***Configuration Options Table*** *in Appendix A.*

Comments/Special Instructions

This CLIN is designed for the White environment. Refer to the reproducible ***Custom Configuration Worksheet*** in Appendix B or call the TAC-4 Help Desk for configuration assistance.

Note: *This CLIN (0037AK) includes on-board 8-plane color graphics. To order the same configuration without the on-board graphics, order* ***CLIN 0037AL****.*

SAIC Galaxy Portable Workstation ♦CLIN 0021AG

This CLIN provides a portable workstation to satisfy demanding military applications requiring portability and performance. Designed around the HP Model 712/80 processor, the SAIC Galaxy portable workstation is fully compatible with the HP 9000 Series 700 workstations.

The unit includes a 10.4" SVGA color display and integral keyboard with a three-button trackball pointing device.

Items Included

Items Included	CLIN
• HP 9000 712/80 Processor with 128-MB RAM	NSP*
• 2-GB Hard Disk Drive	NSP*
• 3.5" Floppy Disk Drive	NSP*
• Keyboard with Trackball	NSP*
• 10.4" Color SVGA LCD (1024 x 768)	NSP*
• Soft Carrying Case	NSP*
• Standard OS (HP-UX 2-User License)	0200AC
• DOS Windowing/Networking Environment, Single-User License	0475AA
• Technical Manuals	NSP*

* *Not Separately Priced*

Features

- 80-MHz HP PA-RISC 7100LC Processor
- 97.1 SPECint92, 123.3 SPECfp92
- One Asynchronous RS-232C Serial Port
- Centronics-compatible Parallel Printer Port
- External Single-Ended SCSI-2 Port
- IEEE 802.3 LAN Interface (AUI or UTP)
- PCMCIA Interface
- Auto-selecting Power Supply (115v/230v)

Customer Installable Options

• 8-MB RAM Expansion	0031AB
• 16-MB RAM Expansion	0031AC
• 32-MB RAM Expansion	0031AD
• Fax Modem	0031AF
• External UPS for Shore Power	0031AJ
• External UPS for Shipboard Power	0031AK
• DC/AC Power Converter for Vehicle Power	0031AL

Comments/Special Instructions

This CLIN is designed for the White or Blue environment.

Note: *This CLIN (0021AG) includes 128-MB RAM installed. To order the same configuration with 64-MB RAM installed, order ♦* ***CLIN 0021AF****; for 32-MB RAM, order ♦* ***CLIN 0031AH****.*

3.2 SERVERS

This section describes the TAC-4 servers that are designed primarily for commercial environments, such as an office or laboratory. The servers designed specifically for shipboard and tactical environments are described in Section 4.1.

The following servers may be ordered as preconfigured system bundles (designated with a ☑) or as standalone products on the TAC-4 contract:

*HP 9000 K-Class Servers**		*CLIN*	*PAGE*
■ Enhanced K-Class SMP Server Bundle (based on the HP Model K420)	☑	♦0015AD	3.2-2
■ K-Class SMP Server Bundle (based on the HP Model K220)	☑	♦0015AC	3.2-3
■ HP Model K420 Server		♦ 0130AB	3.2-4
■ HP Model K220 Server		♦ 0130AA	3.2-5
HP 9000 D-Class Servers*			
■ D-Class SMP Server Bundle (based on the HP Model D350)	☑	♦0015AB	3.2-6
■ HP Model D350 Server		♦ 0125AA	3.2-7
HP 9000 J-Class Servers			
■ J-Class Deskside Server Bundle (based on the HP Model J210)	☑	0017AA	3.2-8
■ HP Model J210 Workstation/Server		0027AG	3.2-9
HP 9000 Series 700 Server			
■ Low-Cost Workstation/Server Bundle (based on the HP Model 712/100)	☑	0020AA	3.2-10
HP 500 Windows Application Servers			
■ HP 501 Windows Application Server Bundle	☑	♦ 0195AA	3.2-11
■ HP 502 Dual-Processor Windows Application Server Bundle	☑	♦ 0195AB	3.2-12

* ***NOTE:*** *Factory-integration of optional components on the D- and K-Class servers is not available at this time; all options are customer-installable.*

☑ *Represents a Preconfigured System Bundle.*

♦ *Represents a new CLIN.*

Enhanced K-Class SMP Server (Model K420)

☑ ♦CLIN 0015AD

With its new state-of-the-art design based on HP's Precision Architecture RISC (PA-RISC), the HP 9000 K420 Server is powerful and highly expansive. This server is a powerful, symmetric multiprocessing (SMP) implementation with unprecedented midrange performance and lasting value. Beginning with the PA-7200 processor, which features 64-bit instruction and data cache paths plus internal 64-bit registers, the K420 SMP Server is also board upgradable to the 64-bit, ultra-high-performance PA-8000 processor.

The HP Model K420 Server offers a 10X performance range within its existing compact and affordable system cabinet. The true benefit of the sophisticated PA-7200 CPU design is the resulting simplicity of the K-Class system-level architecture, which is cost-effective, modular, easy to upgrade, reliable, and capable of attaining high commercial and technical UNIX performance levels today and far into the future.

The Model K420 is ideally suited for general-purpose use in a technical environment such as data management applications, as an NFS server, or for off-loading analysis and software compilation.

Items Included in this Bundle	*CLIN*
• HP 9000 Model K420 with 128-MB RAM	0130AB
• Two 2-GB Fixed Hard Disks	0130AG
• CD-ROM Drive	NSP*
• 4-GB DDS DAT Drive	NSP*
• Console Terminal *(not shown in photo)*	NSP*
• HP-UX Version 10.X (16-User License)	NSP*
• TAC-4 Server OS Additions	0141AA
• Technical Manuals	NSP*

* *Not Separately Priced*

Features

- 120-MHz PA-RISC 7200 Processor
- 2-MB Cache (Combined Instruction and Data)
- 180 SPECint92, 303 SPECfp92
- 4479 SPECrate_int92, 7290 SPECrate_fp92
- Capable of up to 4-Way SMP
- 1460 Transactions per Minute (TPM)
- ECC RAM Expandable to 2 GB
- Two Asynchronous RS-232C Serial Ports
- Centronics-compatible Parallel Printer Port
- Four HP-PB I/O Expansion Slots
- Four FW-SCSI Disk Storage Bays
- EtherTwist LAN and AUI Ports
- UPS Port

Comments/Special Instructions

This Preconfigured System Bundle is designed for the Commercial environment. Refer to the ***Configuration Options Table*** in Appendix A for the customer-installable options for this server. See CLIN 0130AB for additional configuration options.

K-Class SMP Server (Model K220) ☑ ♦CLIN 0015AC

With its new state-of-the-art design based on HP's Precision Architecture RISC (PA-RISC), the HP 9000 K220 Server is powerful and highly expansive. This server represents a robust symmetric multiprocessing (SMP) implementation that offers unprecedented midrange performance and lasting value. With a PA-7200 processor, which features 64-bit instruction and data cache paths plus internal 64-bit registers, the K220 SMP server is also board-upgradable to the 64-bit, ultra-high-performance PA-8000 processor.

The K220 Server offers a 10X performance range within its existing compact and affordable system cabinet. The true benefit of the sophisticated PA-7200 CPU design is the resulting simplicity of the K-Class system-level architecture, which is cost-effective, modular, easy to upgrade, reliable, and capable of attaining high commercial and technical UNIX performance levels today and far into the future.

The K220 Server is ideally suited for general-purpose use in a technical environment such as data management applications, as an NFS server, or for off-loading analysis and software compilation.

Items Included in this Bundle	*CLIN*
• HP 9000 Model K220 with 128-MB RAM	0130AA
• 2-GB Fixed Hard Disk	0130AG
• CD-ROM Drive	NSP*
• 4-GB DDS DAT Tape Drive	NSP*
• Console Terminal *(not shown in photo)*	NSP*
• HP-UX Version 10.X (16-User License)	NSP*
• TAC-4 Server OS Additions	0141AA
• Technical Manuals	NSP*

* *Not Separately Priced*

Features

- 120-MHz PA-RISC 7200 Processor
- 2-MB Cache (Combined Instruction and Data)
- 180 SPECint92, 303 SPECfp92
- 4479 SPECrate_int92, 7290 SPECrate_fp92
- Capable of up to 4-Way SMP
- 1460 Transactions per Minute (TPM)
- ECC RAM Expandable to 1 GB
- Two Asynchronous RS-232C Serial Ports
- Centronics-compatible Parallel Printer Port
- Four HP-PB I/O Expansion Slots
- Four FW-SCSI Disk Storage Bays
- EtherTwist LAN and AUI Ports
- UPS Port

Comments/Special Instructions

This Preconfigured System Bundle is designed for the Commercial environment. Refer to the ***Configuration Options Table*** in Appendix A for the customer-installable options for this server. See CLIN 0130AA for additional configuration options.

HP Model K420 Server ♦CLIN 0130AB

The HP 9000 Model K420 Midrange Server is powerful and highly expansive. This server represents a robust symmetric multiprocessing (SMP) implementation that offers unprecedented midrange performance and lasting value. Beginning with the PA-7200 processor, which features 64-bit instruction and data cache paths plus internal 64-bit registers, the K420 SMP Server is also board upgradable to the 64-bit, ultra-high-performance PA-8000 processor.

The Model K420 Server offers a 10X performance range within its compact and affordable system cabinet. The true benefit of the sophisticated PA-7200 CPU design is the resulting simplicity of the K-Class system-level architecture which is cost-effective, modular, easy to upgrade, and reliable. The Model K420 provides unmatched performance, ease of upgradability, and investment protection.

These servers are ideally suited for general-purpose use in a technical environment such as data management applications, as an NFS server, or to off-load tasks such as analysis and software compilation.

Items Included in this CLIN

• HP 9000 Model K420 with 128-MB RAM	NSP*
• Two 2-GB Fixed Hard Disk Drives	NSP*
• CD-ROM Drive	NSP*
• 4-GB DDS DAT Drive	NSP*
• HP-UX Version 10.X (16-User License)	NSP*
• TAC-4 Server OS Additions	0141AB
• Technical Manuals	NSP*

* *Not Separately Priced*

Features

- One 120-MHz PA-7200 Processor
- 2-MB Cache (Combined Instruction and Data)
- 180 SPECint92, 303 SPECfp92
- 4479 SPECrate_int92, 7290 SPECrate_fp92
- 1460 Transaction per Minute (TPM)
- Capable of up to 4-way SMP
- ECC RAM Expandable to 2 GB
- Two Asynchronous RS-232C Serial Ports
- Centronics-compatible Parallel Printer Port
- Four FW-SCSI Disk Storage Bays
- Four HP-PB I/O Expansion slots
- EtherTwist LAN and AUI ports
- PS/2 Keyboard and Mouse Ports
- UPS Port

Comments/Special Instructions

This CLIN is designed for the Commercial environment. Refer to the ***Configuration Options Table*** in Appendix A for the customer-installable options for this server. See also CLIN 0015AD, which is a Preconfigured System Bundle based on this server.

HP Model K220 Server ♦CLIN 0130AA

The HP 9000 K220 Server is powerful and highly expansive. This server represents a robust symmetric multiprocessing (SMP) implementation that offers unprecedented midrange performance and lasting value. Beginning with the PA-7200 processor, which features 64-bit instruction and data cache paths plus internal 64-bit registers, the K220 SMP server is also board-upgradable in the future to the 64-bit, ultra-high-performance PA-8000 processor.

The K220 Server offers a 10X performance range within its existing compact and affordable system cabinet. The true benefit of the sophisticated PA-7200 CPU design is the resulting simplicity of the K-Class system-level architecture which is cost-effective, modular, easy to upgrade, reliable, and capable of attaining high commercial and technical UNIX performance levels today and far into the future.

The K220 Server is ideally suited for general-purpose use in a technical environment such as data management applications, as an NFS server, or for off-loading analysis and software compilation.

Items Included in this CLIN

• HP 9000 Model K220 with 128-MB RAM	NSP*
• 2-GB Fixed Hard Disk Drive	NSP*
• CD-ROM Drive	NSP*
• 4-GB DDS DAT Drive	NSP*
• HP-UX Version 10.X (16-User License)	NSP*
• TAC-4 Server OS Additions	0141AA
• Technical Manuals	NSP*

* *Not Separately Priced*

Features

- One 120-MHz PA-7200 Processor
- 2-MB Cache (Combined Instruction and Data)
- 180 SPECint92, 303 SPECfp92
- 4479 SPECrate_int92, 7290 SPECrate_fp92
- 1460 Transactions per Minute (TPM)
- Capable of up to 4-Way SMP
- ECC RAM Expandable to 1 GB
- Two Asynchronous RS-232C Serial Ports
- Centronics-compatible Parallel Printer Port
- Four HP-PB I/O Expansion Slots
- EtherTwist LAN and AUI Ports
- PS/2 Keyboard and Mouse Ports
- UPS Port

Comments/Special Instructions

This CLIN is designed for the Commercial environment. Refer to the ***Configuration Options Table*** in Appendix A for the customer-installable options for this server. See also CLIN 0015AC, which is a Preconfigured System Bundle based on this server.

D-Class SMP Server (Model D350) ☑ ♦CLIN 0015AB

Designed to grow with current and future business needs, this HP 9000 D-Class SMP 2-Way Symmetric Multiprocessing (SMP) Server is a low-cost solution that offers performance scalability and large expansion capability. The Model D350 Server offers dual PA-7200 HP Precision-Architecture (PA-RISC) processors, and will support the ultra high-performance 64-bit PA-8000 family of processors in the future.

With capability for a 6X performance scalability range, I/O and storage expandability—all within the same highly affordable system cabinet—the Model D350 delivers unbeatable long-term investment protection among entry-level servers.

Items Included in this Bundle	*CLIN*
• HP 9000 Model D350 Dual Processor with 128-MB RAM	0125AA
• 2-GB Hot-Pluggable Hard Disk	0125AD
• 3.5" Floppy Disk Drive	NSP*
• CD-ROM Drive	NSP*
• 4-GB DDS DAT Drive	0125AF
• Console Terminal *(not shown in photo)*	0125AL
• HP-UX Version 10.X (16-User License)	NSP*
• Technical Manuals	NSP*

* *Not Separately Priced*

Features

- Dual 100-MHz PA-RISC 7200 Processors
- 512-KB Cache (Combined Instruction and Data)
- 6560 SPECrate_int92, 9864 SPECrate_fp92
- 2200 Transactions per Minute (TPM)
- 2-Way SMP Configuration
- ECC RAM Expandable to 768 MB
- Eight Total I/O Slots
- Maximum of Seven EISA Slots
- Five Internal Hot-Plug FW-SCSI Drive Bays
- Three Internal Removable Media Bays
- Centronics-compatible Parallel Printer Port
- IEEE 802.3 LAN Interface
- Auto-selecting Power Supply (115v/230v)

Comments/Special Instructions

This Preconfigured System Bundle is designed for the Commercial environment. Refer to the ***Configuration Options Table*** in Appendix A for the customer-installable options for this server. See CLIN 0125AA for additional configuration options.

HP Model D350 Server ♦CLIN 0125AA

The HP 9000 D-Class Model D350 2-way Symmetric Multiprocessing Server has been designed for unprecedented scalability in a low-cost platform.

The Model D350 Server offers dual PA-7200 HP Precision-Architecture (PA-RISC) processors, and will support the ultra high-performance 64-bit PA-8000 family of processors.

With capability for a 6X performance scalability range, I/O and storage expandability—all within the same highly affordable system cabinet—the Model D350 delivers unbeatable long-term investment protection among entry-level servers.

Items Included in this CLIN

• HP 9000 Model D350 Dual Processor with 128-MB RAM	NSP*
• 2-GB Hot-Pluggable Hard Disk Drive	0125AD
• 4-GB DDS DAT Drive	0125AF
• 3.5" Floppy Drive	NSP*
• CD-ROM Drive	NSP*
• TAC-4 Server OS Additions	0141AA
• HP-UX Version 10.X (16-User License)	NSP*
• Technical Manuals	NSP*

* *Not Separately Priced*

.

Features

- Dual 100-MHz HP PA-RISC 7200 Processors
- 512-KB Cache (Combined Instruction and Data)
- 6560 SPECrate_int92, 9,864 SPECrate_fp92
- 2200 Transactions per Minute (TPM)
- 2-Way SMP Configuration
- ECC RAM Expandable to 768 MB
- Two Asynchronous RS-232C Serial Ports
- Five Internal Hot-Plug FW-SCSI Drive Bays
- Three Internal Removable Media Bays
- Maximum of seven EISA slots
- Centronics-compatible Parallel Printer Port
- PS/2 Ports for Standard PC Keyboard and Mouse
- IEEE 802.3 LAN Interface
- Auto-selecting Power Supply (115v/230v)

Comments/Special Instructions

This CLIN is designed for the Commercial environment. Refer to the ***Configuration Options Table*** in Appendix A for the customer-installable options for this server. See also CLIN 0015AB, which is a Preconfigured System Bundle based on this server.

J-Class Deskside Server (Model J210)

☑ CLIN 0017AA

Based on the HP 9000 Model J210, this CLIN presents the best features of HP high-performance PA-RISC processors in a deskside system package. The Model J210 provides no-compromise, full computing power for unequaled system performance.

With a RAID fixed hard disk array *(not shown in photo)* and enhanced mass storage, this high-performance server is especially suitable for computational analysis, advanced two-dimensional design work, and memory-intensive workloads.

The Model J210 is designed for future expandability to protect customer investment.

Server shown here next to a monitor, keyboard, and mouse (instead of the operator display terminal)

Items Included in this Bundle	CLIN
• HP 9000 Model J210 with 64-MB RAM	0027AA
• 2-GB Fixed Hard Disk	0055AF
• RAID Fixed Hard Disk Array (*not shown in photo*)	0059AD
• 3.5" Floppy Disk Drive	0047AA
• 2-GB 4-mm DAT Tape Drive	0061AC
• Standard OS (HP-UX 2-User License)	0200AC
• Software Network Analyzer	0601AB
• 14" Operator Display Terminal with Keyboard *(not shown in photo)*	NSP*
• Technical Manuals	NSP*
• LaserROM CD Electronic Documentation	NSP*

* *Not Separately Priced*

Features

- 120-MHz PA-RISC 7200 Processor
- 512-KB Cache (Combined Instruction and Data)
- 169 SPECint92, 271 SPECfp92
- 4370 SPECrate_int92, 7540 SPECrate_fp92
- Uniprocessor upgradable to 2-Way SMP
- ECC RAM Expandable to 1 GB
- 16 Memory SIMM Slots
- Maximum of Two Internal SE-SCSI Removable Media Devices
- Maximum of Two Internal FW-SCSI Fixed Hard Disk Drives
- PS/2 Ports for Standard PC Keyboard and Mouse
- Two Asynchronous RS-232C Serial Ports
- Centronics-compatible Parallel Printer Port
- Two EISA, One GSC, and Two EISA/GSC Slots
- IEEE 802.3 LAN Interface (AUI or UTP)
- External SE- and FW-SCSI Connectors
- 16-bit Stereo Audio Input/Output
- Auto-selecting Power Supply (115v/230v)

Comments/Special Instructions

This Preconfigured System Bundle is designed for the White environment. Refer to the ***Configuration Options Table*** in Appendix A for the customer-installable options for this processor. See CLIN 0027AG for additional configuration options based on the Model J210.

HP Model J210 Workstation/Server ☑ CLIN 0027AG

The HP 9000 Model J210 workstation presents the best features of HP high-performance PA-RISC processors in a new system package. The Model J210 provides no-compromise, full computing power for unequaled system performance in technical and scientific software applications.

Server shown here next to a monitor, keyboard, and mouse (instead of the operator display terminal)

Items Included in this Bundle

Items Included in this Bundle	CLIN
• HP 9000 Model J210 with 128-MB RAM	NSP*
• Standard OS (HP-UX 2-User License)	0200AC
• Technical Manuals	NSP*
• LaserROM CD Electronic Documentation	NSP*

* *Not Separately Priced*

Options

- *See the **Configuration Options Table** in Appendix A.*

Features

- 120-MHz PA-RISC 7200 Processor
- 512-KB Cache (Combined Instruction and Data)
- 169 SPECint92, 271 SPECfp92
- 4370 SPECrate_int92, 7540 SPECrate_fp92
- Uniprocessor upgradable to 2-Way SMP
- ECC RAM Expandable to 1 GB
- 16 Memory SIMM Slots
- Maximum of Two Internal SE-SCSI Removable Media Devices
- Maximum of Two Internal FW-SCSI Fixed Hard Disk Drives
- PS/2 Ports for Standard PC Keyboard and Mouse
- Two Asynchronous RS-232C Serial Ports
- Centronics-compatible Parallel Printer Port
- Two EISA, One GSC, and Two EISA/GSC Slots
- IEEE 802.3 LAN Interface (AUI or UTP)
- External SE- and FW-SCSI Connectors
- 16-bit Stereo Audio Input/Output
- Auto-selecting Power Supply (115v/230v)

Comments/Special Instructions

This CLIN is designed for the White environment. A reproducible ***Custom Configuration Worksheet*** is available in Appendix B to facilitate custom configurations based on this processor. See also CLINs 0013AA, 0015AA, and 0017AA, which are Preconfigured System Bundles based on the Model J210.

Note: *This CLIN (0027AG) includes 128-MB RAM. To order this same configuration with 64-MB, order* ***CLIN 0027AA.***

Low-Cost Workstation/Server (Model 712/100)

☑ CLIN 0020AA

Among high-performance, entry-level desktop workstations, the HP 9000 Model 712/100 features a unique combination of price/performance, ease of use, and network functionality ideally suited for today's computing challenges. Using the HP PA-RISC 7100LC processor running at 100 MHz, the Model 712/100 offers unequaled performance for its price. High-performance graphics, as well as superb integer performance, make this workstation an excellent tool for design, development, and analytical work. It is also the workstation of choice for applications that require fast X Window System performance and low-cost 2D wireframe color graphics.

The Model 712/100 is designed for simple installation, expansion, and serviceability. Featuring plug-in memory modules and disks, it is as easy to configure as stereo components.

Shown here with optional mass storage devices

Items Included in this Bundle

Items Included in this Bundle	CLIN
• HP 9000 Model 712/100 with no RAM	0036AA
• 1-GB Fixed Hard Disk	0055AC
• 3.5" Floppy Disk Drive	0047AB
• Keyboard	0065AB
• Trackball	0067AE
• 17" Pedestal-mount Color Monitor	0080AA
• Standard OS (HP-UX 2-User License)	0200AC
• DOS Windowing/Networking Environment, Single-User License	0475AA
• Technical Manuals	NSP*
• LaserROM CD Electronic Documentation	NSP*

* *Not Separately Priced*

Features

- 100-MHz PA-RISC 7100LC Processor
- 256-KB Cache (Combined Instruction and Data)
- 117.2 SPECint92, 144.2 SPECfp92
- ECC RAM Expandable to 192 MB
- Four Memory SIMM Slots
- On-board graphics
- One Asynchronous RS-232C Serial Port
- Centronics-compatible Parallel Printer Port
- External Single-ended SCSI-2 Port
- General Expansion slot
- PS/2 Ports for Standard PC Keyboard and Mouse
- IEEE 802.3 LAN Interface (AUI or UTP)
- 16-bit Stereo Audio Input/Output
- Auto-selecting Power Supply (115v/230v)

Comments/Special Instructions

This Preconfigured System Bundle is designed for the White environment. Refer to the ***Configuration Options Table*** in Appendix A for the customer-installable options for this processor. CLIN 0036AA offers additional configuration options based on the Model 712/100.

HP 501 Windows Application Server ♦CLIN 0195AA

Providing a virtual PC window to any UNIX desktop, the HP 501 Server gives full access to UNIX and PC network resources. The HP 501 Server is based on a Pentium-server, which is a “ready-to-use” pre-installed and pre-configured software/hardware solution.

The HP 501 Server is completely Open Systems-compliant, using the X Window System to deliver PC applications to all workstations and X terminals. This design easily fits into UNIX systems plans without altering the network topology or desktop.

The HP 501 is a total solution and can be effortlessly added to any heterogeneous environment. The hardware and software bundle is a complete, fully integrated product which embodies HP's quality, reliability, and support.

Items Included	*CLIN*
• HP 501 with 64-MB RAM	NSP*
• 1-GB Hard Disk Drive	NSP*
• CD-ROM Drive	NSP*
• 3.5" Floppy Disk Drive	NSP*
• 15" Pedestal-mount Color Monitor	NSP*
• Keyboard	NSP*
• Mouse	NSP*
• PC Server Software (15-User License)	NSP*
• Technical Manuals	NSP*

* *Not Separately Priced*

Features

- 133-MHz Pentium Processor
- RAM Expandable to 256 MB
- EtherTwist LAN and AUI Ports
- PS/2 Keyboard and Mouse Ports

Options

- *See the* ***Configuration Options Table*** *in Appendix A.*

Comments/Special Instructions

This CLIN is designed for the Commercial environment.

HP 502 Dual-Processor Windows Application Server ♦CLIN 0195AB

The HP 502 Dual-Processor Windows Application Server offers significant improvements over the HP 501. With dual 133-MHz Pentium processors and expanded RAM and mass storage, the HP 502 provides enhanced access to UNIX and PC network resources.

The HP 502 Server is completely Open Systems-compliant, using the X Window System to deliver PC applications to all workstations and X terminals. This design easily fits into UNIX systems plans without altering the network topology or desktop.

The HP 502 is a total solution and can be effortlessly added to any heterogeneous environment. The hardware and software bundle is a complete, fully integrated product which embodies HP's quality, reliability, and support.

Items Included	*CLIN*
• HP 502 with 128-MB RAM	NSP*
• 2-GB Hard Disk Drive	NSP*
• CD-ROM Drive	NSP*
• 3.5" Floppy Disk Drive	NSP*
• 15" Pedestal-mount Color Monitor	NSP*
• Keyboard	NSP*
• Mouse	NSP*
• PC Server Software (30-User License)	NSP*
• Technical Manuals	NSP*

* *Not Separately Priced*

Features

- Dual 133-MHz Pentium Processors
- RAM Expandable to 256 MB
- EtherTwist LAN and AUI Ports
- PS/2 Keyboard and Mouse Ports

Options

- *See the* ***Configuration Options Table*** *in Appendix A.*

Comments/Special Instructions

This CLIN is designed for the Commercial environment.

3.3 PROCESSORS AND UPGRADES

This section describes the specialized processors and processor upgrades available on the TAC-4 contract, including the following:

	PAGE
3.3.1. VMEbus Board Computers and Components	3.3-2
3.3.2. VXI Systems and Components	3.3-4
3.3.3. Processor Modules	3.3-11
3.3.4. RAM Expansion Modules	3.3-12

3.3.1 VMEBUS BOARD COMPUTERS AND COMPONENTS

The VMEbus Single-Board Computer packs incredible performance into one 6U VMEbus slot. The HP 9000 Model 743*i* provides VME D64 master/slave capability for excellent throughput, with onboard ECC DRAM memory for correcting single-bit errors and detecting multi-bit errors. The Model 743*i* can be ordered as a VME single-board computer in two clock speeds (64 MHz and 100 MHz), as well as configured in the HP Model 748*i* system chassis. The VMEbus products offered on the TAC-4 contract are described below.

HP 9000 Model 743*i*/64 Processor Module with On-Board 8-Plane Graphics — CLIN 0037AD

This CLIN offers a 64-MHz HP PA-RISC 7100LC processor module, with 8-plane on-board graphics, as an additional processor for the HP Model 748*i* (CLINs 0037AH, 0037AJ, 0037AK, and 0037AL).

Features

- 64-MHz PA-RISC 7100LC Processor
- 256-KB Cache (Combined Instruction and Data)
- 96.5 SPECfp92, 66.6 SPECint92
- On-Board 8-Plane Graphics

HP 9000 Model 743*i*/64 Processor Module — CLIN 0037AE

This CLIN offers a 64-MHz HP PA-RISC 7100LC processor module as an additional processor for the HP Model 748*i* (CLINs 0037AH, 0037AJ, 0037AK, and 0037AL).

Features

- 64-MHz PA-RISC 7100LC Processor
- 256-KB Cache (Combined Instruction and Data)
- 96.5 SPECfp92, 66.6 SPECint92

HP 9000 Model 743*i*/100 Processor Module with On-Board 8-Plane Graphics — CLIN 0037AF

This CLIN offers a 100-MHz HP PA-RISC 7100LC processor module, with on-board 8-plane graphics, as an additional processor for the HP Model 748*i* (CLINs 0037AH, 0037AJ, 0037AK, and 0037AL).

Features

- 100-MHz PA-RISC 7100LC Processor
- 256-KB Cache (Combined Instruction and Data)
- 137.0 SPECfp92, 100.1 SPECint92
- On-Board 8-Plane Graphics

HP 9000 Model 743i/100 Processor Module — CLIN 0037AG

This CLIN offers a 100-MHz HP PA-RISC 7100LC processor module as an additional processor for the HP Model 748*i* (CLINs 0037AH, 0037AJ, 0037AK, and 0037AL).

Features

- 100-MHz PA-RISC 7100LC Processor
- 256-KB Cache (Combined Instruction and Data)
- 138.7 SPECfp92, 115.1 SPECint92

VME Expansion Chassis — ♦CLIN 0086AA

This CLIN provides Hybricon's VME 6U x 160-mm 12-slot Expansion Chassis. The unit contains the subrack/backplane assemblies, a 350-watt power supply, two half-height 5.25-inch SE-SCSI device bays, air inlet/filter area, and I/O cabling support.

VME Expansion Chassis Rack-Mounting Kit — ♦CLIN 0086AB

This CLIN provides rails and low-smoke cables for the VME Expansion Chassis (CLIN 0086AA).

3.3.2 VXI SYSTEMS AND COMPONENTS

The HP Model V743 VXIbus computer system is a high-performance 100-MHz PA-7100LC processor that delivers extraordinary performance and direct access to the VXI backplane. The V743 computer was developed specifically as an embedded HP-UX (UNIX) controller for VXI, thereby providing the high I/O performance of direct VXI backplane support, the space savings of an embedded computer, and the high power and speed of HP PA-RISC, all in an HP-UX environment.

The V743 processor can be ordered in three memory configurations (32-, 64-, or 128-MB RAM). For a full system configuration, a C-size, 13-slot VXI mainframe is available with the following module options:

- dual 2.1-GB SE-SCSI hard disk drive modules
- a SCSI-2 disk module that includes a 1-GB hard disk drive and a 21-MB SE-SCSI floptical drive
- a data disk/DAT SCSI-2 module with a 2.1-GB hard disk drive (FW-SCSI) and a 4-GB DDS DAT drive
- analog-to-digital converter (10MSample/sec) module
- 25.6-kHz 8-channel digitizer module
- digital signal processor module.

The CLIN descriptions on the following pages describe the VXI system modules and components available on the TAC-4 contract.

Model V743/100 VXI Embedded Controller Modules ♦CLIN 0038AC

The Model V743/100, with its high-speed 100-MHz PA-RISC 7100LC processor is ideal for development environments as well as demanding run-time applications. The V743 supports all VXI addressing modes (A16, A24, A32). It also provides a programmable interrupt handler, single-channel DMA for VXI extended memory devices, and a 1-MB dual-ported memory buffer for high-speed data acquisition.

The V743 is completely compatible with other HP 9000 workstations and controllers.

Items Included

	CLIN
• V743/100 Processor with 128-MB RAM	NSP*
• Subminiature-to-standard connector converter cables:	NSP*
– 70-cm video cable with 15-pin VGA connector	
– 70-cm LAN cable with AUI connector	
– 2-m HP-IB cable with 24-pin standard HP-IB connector	
– Two 70-cm RS-232 cables with standard 9-pin connector	
• HP-UX LTU	NSP*
• Technical Manuals	NSP*

* *Not Separately Priced*

Features

- 100-MHz PA-RISC 7100LC Processor in a C-size VXI Single-Slot Module
- 1024 x 768 Graphics Output, Configurable to 1280 x 1024
- Two Asynchronous RS-232C Serial Ports
- External Single-Ended SCSI-2 Port
- IEEE 802.3 LAN Interface
- HP-IB and PS/2 Ports
- Clock/Trigger Ports
- SCSI Terminator
- Front Panel Audio Output
- Supports All VXI Addressing Modes

Customer Installable Options (for CLINs 0038AA and 0038AB)

• 32-MB RAM Expansion	0035AG
• 64-MB RAM Expansion	0035AD

Comments/Special Instructions

This CLIN is designed for the Commercial environment. Please call the TAC-4 Help Desk for configuration assistance.

Note: *This CLIN (0038AC) includes 128-MB RAM installed. To order the same configuration with 64-MB RAM, order* ***♦CLIN 0038AB****; for 32-MB RAM, order* ***♦CLIN 0038AA****.*

13-Slot C-Size High-Power VXI Mainframe ♦CLIN 0038AD

This CLIN offers Hewlett-Packard's highest-power, highest-performance 13-slot C-size VXI mainframe. It provides ample dynamic and peak currents for even the most demanding, power-hungry applications. The HP VXI Mainframe is well suited for applications that require high-density instrumentation.

The HP VXI Mainframe complies with the VXI*plug&play* Specification. This mainframe also complies with the VXI Specification by providing injector surface rails used by the new HP QUIC easy module insertion and extraction system.

Features

- High peak and dynamic currents
- Ultra-reliable power supply
- Easy to service while mounted in a test rack
- VXI *plug&play* compatible
- Improved, uniform airflow from the pressurized air channel cooling system
- High-performance backplane with 13 slots and VXI P1 and P2 connectors

VXI Analog-to-Digital Converter (ADC) Module ♦CLIN 0038AE

This CLIN offers the HP 10 MSa/s Digitizer with DSP. This module provides a high-resolution digitizer that includes DSP-based real-time digital filtering with digital LO and large FIFO memories, providing tools that take full advantage of the resolution provided by the digitizer. The digitizer is a two-pass (or sub-ranging) type that provides 23 bits of raw resolution. It uses a combination of dithering and an extraordinary on-the-fly distortion correction technique to produce up to 18 bits (110dBfs) of distortion-free, spurious-free operating range. The wide linear range helps ensure clean signal capture, even for small signals close to the carrier.

Features

- 8 MB of memory (4Msa, 16 bits), FIFO
- High dynamic range
- Built-in anti-alias filters and signal conditioning
- Programmable digital filters and digital LO
- High-speed local bus support
- Module size-slots
- 10.24-MHz clock
- Register-based

VXI 25.6-kHz 8-Channel Digitizer Module ♦CLIN 0038AF

The HP VXI 25.6-kHz 8-Channel Digitizer Module simplifies system integration by implementing the entire measurement front-end all in a single-wide, C-size VXI module. Not only is this easier, but it's smaller, more reliable, and less expensive than multi-module solutions.

This HP Digitizer Module ensures data integrity. With full-scale ranges from 5 mV to 10 V in 1, 2, and 5 steps, you can look at a wide variety of signals. Input channels can either be grounded or differential to remove contaminating common-mode signals from power lines. Tight cross-channel phase and time delay accuracy are maintained with simultaneous sample and hold amplifiers. For mechanical vibration measurements, built-in ICP power for piezoelectric transducers saves the cost and complexity of external supplies.

The HP Digitizer Module also provides guaranteed system performance by containing the entire signal path in a single module. This provides two distinct advantages—the number of places errors can enter the system is reduced and the performance of the complete signal path can be guaranteed. With this module, complicated calibration with an external source is not required to achieve specified performance. It has an internal calibrator that guarantees measurement accuracy.

The HP VXI 25.6-kHz 8-Channel Digitizer Module uses a fixed high-frequency analog filter followed by programmable digital filters to guarantee alias protection down to frequency spans as low as 0.39 Hz. Because the filters are digital, they are stable and repeatable.

This Digitizer Module also supports high-speed data transfers to other VXI modules over the VXI Local Bus.

Features

- Eight differential/grounded inputs
- AC/DC coupling
- ICP power for accelerometers
- Individual gains
- Programmable digital filters
- Simultaneous sample and hold
- Separate 16-bit A/Ds per channel

VXI SCSI Disk Module ♦CLIN 0038AG

This HP VXI SCSI mass storage disk module is advantageous when space is at a premium and transportability is crucial. This VXI SCSI Disk Module comes standard with a built-in 1-GB hard disk drive and a 21-MB floptical disk drive. This 3.5-inch drive reads and writes magnetically with either optical or magnetic tracking.

The HP VXI SCSI Disk Module connects the disk to your controller or workstation via the SCSI interface, not through the VXI backplane. This means controller communication with the disk won't interrupt, or be interrupted by, traffic on the VXI backplane. The VXI SCSI Disk Module also has power supply isolation filtering to ensure that disk drive transients don't propagate to other modules. The module responds to module ID queries over the VXI backplane, allowing the system controller to determine all assets that reside in the system.

Features

- 1-GB internal hard disk drive
- 21-MB floptical disk drive
- Power supply isolation filtering
- Transportability

VXI SCSI-2 Data Disk/DAT Module ♦ CLIN 0038AH

The HP VXI SCSI-2 Data Disk/DAT Module provides a high-speed, dual SCSI-2 interface for online recording of digital data. It's ideal for a variety of data capture applications, including both dynamic and static signal acquisition to disk. The VXI Data Disk/DAT Module is used in transient signal analysis, acoustic and mechanical measurements, and electronic surveillance. The module has a 2.1-GB internal single-ended SCSI-2 hard disk drive and a 4-GB internal, single-ended SCSI-2 DAT tape drive (typically 8-GB with compression) for data backup.

Features

- 2.1-GB internal SCSI-2 hard disk drive
- 4-GB internal DAT tape drive (typically 8-GB with compression)
- Fast storage in a VXI module
- Single-ended SCSI-2 port
- Differential fast-wide SCSI-2 ports
- Sustained transfer rate of 3 Mb/s per module
- Comprehensive software support

VXI SCSI-2 Data Disk Module ♦CLIN 0038AJ

The HP VXI SCSI-2 Data Disk Module provides a high-speed dual SCSI-2 interface for online recording of digital data. It's ideal for a variety of data capture applications, including both dynamic and static signal acquisition to disk. The VXI Data Disk Module is used in transient signal analysis, acoustic and mechanical measurements, and electronic surveillance. This module has dual 2.1-GB internal single-ended SCSI-2 disk drives.

Features

- Dual 2.1-GB internal single-ended SCSI-2 hard disk drives
- Two differential fast-wide SCSI-2 ports
- Sustained transfer rate of 6.0 Mb/s using both disks
- Comprehensive software support

VXI Digital Signal Processor ♦CLIN 0038AK

The HP VXI Digital Signal Processor is a high-performance measurement controller and digital signal processor. It combines a 32-bit microprocessor running at 40 MHz with a state-of-the-art digital signal processor and user-written, downloaded software to achieve measurement processing performance previously seen only in custom hardware systems.

Features

- 40-MHz Motorola 68030 32-bit processor
- 16 MB of RAM, expandable to 64 MB
- Powerful processing capability using floating-point DSP
- Uses up to 5 DSPs per module to increase DSP speed
- High-speed local bus support
- Message-based commander/servant
- Programmable interrupt handler

VXI 2.1-GB System Disk with 4-GB DAT Drive ♦CLIN 0038AL

The HP VXI System Disk with DAT Drive is the mass storage module designed for situations where a large system disk is required and the transportability of a VXI module must be maintained. It is also the module of choice for frequent data or system backups requiring a built-in DAT drive. This is a two-slot VXI module providing a single-ended SCSI 2.1-GB system disk and a 4-GB DAT drive (typically 8-GB with data compression).

The single-ended SCSI-2 connectors on the front panel provide the link to the host computer via a short external cable. Connection to other SCSI-2 devices is achieved via the second SCSI-2 connector. The SCSI-2 interface does not provide a connection to the VXI backplane, ensuring that the interface traffic will not interrupt, or be interrupted by, traffic on the VXI backplane.

Typically, a backup of 2 GB of data takes approximately 30 minutes using compression and the industry-standard Digital Data Storage (DDS) format.

Features

- 2.1-GB system disk (2.17-GB formatted capacity)
- 4-GB DAT tape (typically 8-GB with compression)
- SCSI-2 compatibility
- Packaged in a 2-slot VXI module

VXI 50-Ohm RF Multiplexer ♦CLIN 0038AM

The HP VXI 50-Ohm RF Multiplexer is the ideal choice to switch test signals to your oscilloscope and spectrum, network, or distortion analyzers. Switching involves connecting a channel to its common terminal. The VXI 50-Ohm RF Multiplexer can be used with the SCPI command SCAN (@100:124) to scan multiple channels, where each channel is switched to its common, one at a time.

The VXI 50-Ohm RF Multiplexer module is arranged as six independent banks of channels (Bank 0 through Bank 5), each acting as a 1x4 single-wire multiplexer. Only one channel in each bank can be connected to its common at any time. The multiplexer relays are arranged in a tree-switched configuration, providing high isolation and low VSWR.

Features

- Six 1x4 multiplexers
- Switch signals up to 1.3 GHz
- SMB male connectors for high performance

3.3.3 PROCESSOR MODULES

This section identifies the standalone processor modules that can be used to upgrade or enhance TAC-4 workstations and servers.

HP 9000 K-Class Processor Module ♦ CLIN 0130AC

This CLIN offers a 120-MHz PA-RISC 7200 processor module as an additional processor for the HP K-Class Servers (CLINs 0015AC, 0015AD, 00130AA and 00130AB). A maximum of four processors can be installed.

Features

- 2-MB Cache (Combined Instruction and Data)
- 180 SPECint92, 303 SPECfp92
- 4479 SPECrate_int92, 7290 SPECrate_fp92

3.3.4 RAM EXPANSION MODULES

Most of the TAC-4 base systems are available with several alternative RAM configurations. Larger memory configurations may be required to achieve desired system performance for specific applications and workloads.

Each RAM expansion module is typically a pair of Single Inline Memory Modules (SIMMs), with each SIMM occupying one slot. RAM expansion modules are available for optimizing the following TAC-4 products:

- Model J210-based Workstations/Servers
- Model C110-based Workstations
- Model 712-based Workstations/Servers
- SAIC Galaxy and Talon Portable Workstations
- Model 743*i* and V743 Processors
- Model D350 Servers
- Model K220/K420 Servers
- HP 500 PC Application Servers
- Printers
- X-Windows Terminals

For Model J210-based Systems	***CLIN***
For the High-Performance Desktop Workstation/Server (CLIN 0027AA):	
32-MB RAM Expansion (two 16-MB SIMMs)	0027AB
128-MB RAM Expansion (two 64-MB SIMMs)	0027AC
For the High-Performance Desktop Workstation (CLIN 0027AG):	
128-MB RAM Expansion (two 64-MB SIMMs)	0027AC
For the High-Performance Rack-Mount Workstation/Server (CLIN 0023AA):	
32-MB RAM Expansion (two 16-MB SIMMs)	0023AB
128-MB RAM Expansion (two 64-MB SIMMs)	0023AC

For Model C110-based Systems (CLINs 0028AA and 0028AB)

32-MB RAM Expansion (two 16-MB SIMMs)	0028AC
128-MB RAM Expansion (two 64-MB SIMMs)	0028AD

For Model 712-based Systems (CLINs 0035AA, 0035AH, 0035AJ and 0036AA)

8-MB RAM Expansion (two 4-MB SIMMs)	0035AB
16-MB RAM Expansion (two 8-MB SIMMs)	0035AC
64-MB RAM Expansion (two 32-MB SIMMs)	0035AD
32-MB RAM Expansion (two 16-MB SIMMs)	0035AG

For the SAIC Galaxy Portable Workstation (CLINs 0021AF and 0031AH) and SAIC Talon Rugged Portable Workstation (CLINs 0011AF, and 0033AH)

8-MB RAM Expansion (two 4-MB SIMMs)	0031AB
16-MB RAM Expansion (two 8-MB SIMMs)	0031AC
32-MB RAM Expansion (two 16-MB SIMMs)	0031AD

For Model 743i, 748i- and V743-based Systems (CLINs 0010AA through 0010AC, 0037AD through 0037AL, and 0038AA through 0038AC)

32-MB RAM Expansion (1 RAM card)	0035AG
64-MB RAM Expansion (2 RAM cards)	0035AD

For the Model D350 Servers (CLIN 0125AA)

32-MB RAM Expansion (two 16-MB SIMMs)	0125AB
128-MB RAM Expansion (two 64-MB SIMMs)	0125AC

For the Model K220 or K420 Servers (CLINs 0130AA and 0130AB)

32-MB RAM Expansion (two 16-MB SIMMs)	0130AD
128-MB RAM Expansion (two 64-MB SIMMs)	0130AE
RAM Expansion — Additional Memory Carrier	0130AF

For the HP 500 PC Application Servers (CLINs 0195AA and 0195AB)

16-MB RAM Expansion (two 8-MB SIMMs)	0195AC
32-MB RAM Expansion (two 16-MB SIMMs)	0195AD

For Printers

For the LaserJet 4 Plus – Printer Type P1 (CLIN 0063AA)

1-MB RAM Expansion (one 1-MB SIMM)	0063AB
8-MB RAM Expansion (one 8-MB SIMM)	0063AS
16-MB RAM Expansion (one 16-MB SIMM)	0063AT

For the LaserJet 4Si – Printer Type P2 (CLIN 0063AC)

1-MB RAM Expansion (one 1-MB SIMM)	0063AD
8-MB RAM Expansion (one 8-MB SIMM)	0063AU

For the DeskJet 1200C – Printer Type P4 (CLIN 0063AG)

1-MB RAM Expansion (one 1-MB SIMM)	0063AH
8-MB RAM Expansion (one 8-MB SIMM)	0063AV

For DeskJet 1200C – Printer Type P5 (CLIN 0063AJ)

1-MB RAM Expansion (one 1-MB SIMM)	0063AK
8-MB RAM Expansion (one 8-MB SIMM)	0063AW

For the X-Windows Terminal (CLIN 0083AJ)

8-MB RAM Expansion (one 8-MB SIMM)	0083AM
16-MB RAM Expansion (one 16-MB SIMM)	0083AN
32-MB RAM Expansion (one 32-MB SIMM)	0083AP

3.4 PERIPHERAL PRODUCTS

This section describes the optional peripheral hardware products available on the TAC-4 contract. Appendix A contains a ***Configuration Options Table*** that summarizes which peripheral products are available for each of the processors.

The products are presented as follows:

		PAGE
3.4.1	CD-ROM Drives	3.4-2
3.4.2	Graphics Cards and Controllers	3.4-4
3.4.3	Keyboards, Trackballs, and Input Devices	3.4-14
3.4.4	Mass Storage Devices	3.4-17
3.4.5	Monitors and Display Devices	3.4-27
3.4.6	Networking Products	3.4-30
3.4.7	Office Power Devices	3.4-35
3.4.8	Office Racks and Accessories	3.4-38
3.4.9	Printers	3.4-40
3.4.10	Video Products	3.4-43
3.4.11	Miscellaneous Products	3.4-46

3.4.1 CD-ROM DRIVES

The CD-ROM drives on the TAC-4 contract provide a vehicle for loading, recovering, or updating system and application software. They also make online documentation available through the HP LaserROM CD. CD-ROM drives are also a key component of audio/video computer-based training courses. The following CD-ROM drives are available on the TAC-4 contract:

■ CD-ROM Drive – Internal (SE-SCSI) for C-Class Workstations	♦CLIN 0028AF
■ CD-ROM Drive – Internal (SE-SCSI) for Series 700 and J-Class Workstations	CLIN 0049AA
■ CD-ROM Drive – External (SE-SCSI)	CLIN 0049AC

CD-ROM Drive – Internal (SE-SCSI) ♦CLIN 0028AF

This CD-ROM drive, designed for C-Class workstations (CLINs 0028AA and 0028AB), provides an internal 5.25-inch half-height form factor with an embedded single-ended SCSI-2 interface. This device is capable of reading audio formats as described in the Red Book and Yellow Book format specifications.

Features

- 650-MB data format capacity
- 4X, 2X, 1X media rotational speeds
- 300-blocks/sec sustained block transfer rate
- 600-KB sustained data transfer rate
- 190-msec typical random average access time
- Standard stereo head phone jack and audio volume control

CD-ROM Drive – Internal (SE-SCSI) CLIN 0049AA

This CD-ROM drive is suitable for the Series 700 and J-Class workstations. It is an internal, single-ended SCSI CD-ROM drive with a 5.25-inch half-height form factor and an embedded SCSI-2 interface. This device is capable of reading audio formats as described in the Red Book and Yellow Book format specifications.

Features

- 650-MB data format capacity
- 4X, 2X, 1X media rotational speeds
- 300-blocks/sec sustained block transfer rate (4X)
- 600-KB sustained data transfer rate (4X)
- 190-msec typical random average access time (4X)
- Standard stereo head phone jack and audio volume control on front bezel

CD-ROM Drive – External (SE-SCSI) CLIN 0049AC

This external single-ended SCSI CD-ROM drive has an internal 5.25-inch half-height form factor with an embedded SCSI-2 interface. This CD-ROM drive is mounted in a standalone case. This device is capable of reading audio formats as described in the Red Book and Yellow Book format specifications.

Features

- 650-MB data format capacity
- 4X, 2X, 1X media rotational speeds
- 300-blocks/sec sustained block transfer rate
- 600-KB sustained data transfer rate
- 190-msec typical random average access time
- Standard stereo head phone jack and audio volume control on front bezel

3.4.2 GRAPHICS CARDS AND CONTROLLERS

Hewlett-Packard workstations provide industry-leading 2D graphics capabilities and offer outstanding graphics performance. By incorporating PA-RISC floating point technology in the graphics accelerator design, HP's VISUALIZE graphics architecture provides a major performance leap over other products on the market today. The TAC-4 graphics products, which are further described below, are:

For the VME Portable Workstations:

- 8-Bit VME Graphics Controller for an External LCD or CRT Display — ♦ CLIN 0010AE
- 24-Bit VME Graphics Controller for an External LCD or CRT Display — ♦ CLIN 0010AF

For the HP Model 743i/748i:

- 8-Plane Color Graphics Mezzanine Card — CLIN 0037AP
- Single-Channel Graphics VME Card — CLIN 0037AS
- Dual-Channel Graphics VME Card — CLIN 0037AT

For the J-Class and C-Class Workstations:

- Single-Output 2D Graphics Subsystem (G1) — CLIN 0091AB
- Multiple-Output 2D Graphics Subsystem (G2) — CLIN 0091AC
- Single-Output 3D Graphics Subsystem (G3) — CLIN 0091AD
- Color Graphics Subsystem — ♦ CLIN 0091AE
- HP VISUALIZE-8 Subsystem — ♦ CLIN 0092AB
- HP VISUALIZE-24 Subsystem — ♦ CLIN 0092AC
- HP VISUALIZE-8 and -24 Video Output Option — ♦ CLIN 0092AD
- HP VISUALIZE-48 Subsystem — ♦ CLIN 0092AE
- HP VISUALIZE-48 Subsystem with 16-MB Texture Map Memory Option — ♦ CLIN 0092AF
- HP VISUALIZE-48 Subsystem with Video Output Option — ♦ CLIN 0092AG
- HP VISUALIZE-48 Subsystem with 16-MB Texture Map and Video Output Options — ♦ CLIN 0092AH

For the K-Class Servers:

- 2D Graphics Card — ♦ CLIN 0130AJ

Each graphics controller option requires the associated graphics slots. For the J-Class and C-Class workstations, the graphics options require Graphics System Connect (GSC) slots, as defined in the table below. Based on the workstation selected and the number of GSC slots available, you may choose multiple graphics options to meet particular needs.

The following table summarizes the graphics option configurations available for the workstations and servers offered on the TAC-4 contract.

Table 1. Graphics Configuration Options

Platform	*Graphics CLIN*	*Description*	*Requirements*	*Displays*	*Seats*
HP Model 712/80 and 712/100	Internal On-Board Graphics	On-Board 8-Bit Graphics		1	1
	Internal On-Board Graphics + 0036AL	On-Board 8-Bit Graphics with Second Monitor Port and Second LAN AUI Port		2	1
	Internal On-Board Graphics + 0036AM	On-Board 8-Bit Graphics with Second Monitor Port		2	1
HP Model J210 and J210XC	0091AB	Single-Output 2D Graphics (G1)	1 GSC Slot	1	1
	0091AD	Single-Output 3D Graphics (G3)	1 GSC Slot	1	1
	0091AE	Color Graphics Subsystem	1 GSC Slot	1	1
	0092AB	Visualize-8 Graphics Subsystem	2 GSC Slots	1	1
	0092AC	Visualize-24 Graphics Subsystem	2 GSC Slots	1	1
	0092AE	Visualize-48 Graphics Subsystem	3 GSC Slots	1	1
	0092AF	Visualize-48 Graphics Subsystem with Texture Map	3 GSC Slots	1	1
	0092AG	Visualize-48 Graphics Subsystem with Video Output	3 GSC Slots	1	1
	0092AH	Visualize-48 Graphics Subsystem with Texture Map and Video Output	3 GSC Slots	1	1
	(2) 0091AE	(2) Color Graphics Subsystems	2 GSC Slots	2	1
	0091AE + 0092AC	Color Graphics Subsystem with Visualize-24 Graphics Subsystem	3 GSC Slots	2	1
	0091AB + 0091AD	Single-Output 2D Graphics (G1) with 3D Graphics Subsystem	2 GSC Slots	2	2
	0091AC	Multiple-Output 2D Graphics (G2)	1 GSC Slot	2	1–2
	(2) 0091AB	(2) Single-Output 2D Graphics (G1)	2 GSC Slots	2	1–2
	0091AE + 0091AC	Color Graphics Subsystem with Multiple-Output 2D Graphics (G2)	2 GSC Slots	3	1
	(2) 0091AC	(2) Multiple-Output 2D Graphics (G2)	2 GSC Slots	4	1–4

Platform	Graphics CLIN	Description	Requirements	Displays	Seats
HP Model C110	0091AE	Color Graphics Subsystem	1 GSC Slot	1	1
	0092AB	Visualize-8 Graphics Subsystem	2 GSC Slots	1	1
	0092AC	Visualize-24 Graphics Subsystem	2 GSC Slots	1	1
	0092AE	Visualize-48 Graphics Subsystem	3 GSC Slots	1	1
	0092AF	Visualize-48 Graphics Subsystem with Texture Map Memory	3 GSC Slots	1	1
	0092AG	Visualize-48 Graphics Subsystem with Video Output	3 GSC Slots	1	1
	0092AH	Visualize-48 Graphics Subsystem with Texture Map and Video Output	3 GSC Slots	1	1
	(2) 0091AE	(2) Color Graphics Subsystems	2 GSC Slots	2	1
	0091AC	Multiple-Output 2D Graphics (G2)	1 GSC Slot	2	1
	0091AE + 0091AC	Color Graphics Subsystem with Multiple-Output 2D Graphics (G2)	2 GSC Slots	3	1
	0091AE + 0092AC	Color Graphics Subsystem with Visualize-24 Graphics Subsystem	3 GSC Slots	2	1
HP Model D350	0091AE	Color Graphics Subsystem	1 GSC Slot	1	1
HP Model K220 and K420	0130AJ	2D Graphics Card	1 GSC Slot	1	1

Graphics Performance

Graphics performance often equates to overall system-level application performance, based on what a user sees and how quickly it is displayed on a screen. However, graphics performance involves many elements, including the speed of the CPU, the bandwidth design, disk I/O performance, and graphics processing speed.

Graphics performance characterization benchmarks are intended to indicate how fast systems can display graphics typical of different application segments. The Graphics Performance Characterization (GPC) Committee, with members from all major workstation vendors, has agreed to a number of benchmarks to drive toward this objective. The following GPC benchmarks are weighted averages of filesets and operations typical of a particular application area:

- **Xmark93.** This benchmark is a weighted version of X11perf, with the weighting of the X11 calls designed to reflect how often each type of call is used by a mix of 2D applications, as well as the graphical user interface.
- **PLBwire93.** This benchmark is designed to measure how well a system can render actual 3D wireframe models such as those seen in mechanical CAD designs, geographic information systems, and scientific visualization applications.
- **PLBsurf93.** This benchmark uses four different application filesets to test how fats a system can render lighted and shaded 3D models typical of mechanical CAD, AEC, scientific visualization, simulation, and industrial design applications.

The following benchmark results reflect measurements of graphics performance for the HP Model J210/C110 (and J210XC). Of course, in all cases, actual application performance remains the ultimate benchmark.

	Graphics Performance Benchmarks for the HP Model J210/C110 (and J210XC)		
Graphics Option	**Xmark93**	**PLBwire93**	**PLBsurf93**
Single-Output HCRX-8 (CLIN 0091AB)	15.4	84	43 (44)
Dual-Output HCRX-8 (CLIN 0091AC)	15.4	84	43 (44)
Single-Output CRX-48Z (CLIN 0091AD)	15.4	85 (92)	94 (106)
HP Visualize-8 (CLIN 0092AB)	15.4	87 (90)	141 (149)
HP Visualize-24 (CLIN 0092AC)	15.4	87 (90)	141 (149)
HP Visualize-48 (CLIN 0092AE)	16.6	182	230 (246)

The graphics products available on the TAC-4 contract are described on the following pages.

8-Bit VME Graphics Controller for an External LCD or CRT Display ♦CLIN 0010AE

This CLIN provides an 8-bit VME graphics controller for an external LCD or CRT display used in the VME Portable Workstations (CLINs 0010AA, 0010AB, and 0010AC). This VMEbus 8-bit color graphics display controller has high-resolution LCD/EL (digital) and RGB (analog) video ports on a single board, with a 40-MHz 34020 32-bit graphics processor and VRAM/hardware pixel acceleration.

Features

- Analog output up to 2048 x 1536
- Digital output up to 1280 x 1024
- Display size from 1 million up to 8 million addressable pixels

24-Bit VME Graphics Controller for an External LCD or CRT Display ♦CLIN 0010AF

This CLIN provides a 24-bit VME graphics controller for an external LCD or CRT display used in the VME Portable Workstations (CLINs 0010AA, 0010AB, and 0010AC). This VMEbus 24-bit color graphics display controller has high-resolution LCD/EL (digital) and RGB (analog) video ports on a single board, with a 40-MHz 34020 32-bit graphics processor and VRAM/hardware pixel acceleration.

Features

- Analog output up to 2048 x 1536
- Digital output up to 1280 x 1024
- Display size from 1 million up to 8 million addressable pixels

8-Plane Color Graphics Mezzanine Card CLIN 0037AP

This CLIN provides the 8-plane color graphics mezzanine card for the HP Model 743*i* VMEbus Board Computer.

Features

- One 8-bit port
- Single display
- Non-interlaced resolution of 1280 x 1024 pixels

Single-Channel Graphics VME Card — CLIN 0037AS

This single-channel VME graphics card from MAXIM is an integrated graphics accelerator for the HP Model 748*i*. It uses Weitek's P9000 graphics rendering processor and a MIPS R3000-based processor to support the graphics pipeline and conserve CPU resources. *This CLIN requires one 6U VME slot.*

Features

- One or two 8-bit color frame buffers
- 2-MB of off-screen, on-board memory
- Multiple users/monitors
- Multiple resolutions (640 x 480 to 1600 x 1280)

Dual-Channel Graphics VME Card — CLIN 0037AT

This dual-channel VME graphics card from MAXIM is available for the HP Model 748*i*. The card uses Weitek's P9000 graphics rendering processor and a MIPS R3000-based processor to support the graphics pipeline and conserve CPU resources. *This CLIN requires one 6U VME slot.*

Features

- One or two 8-bit color frame buffers
- 2-MB of off-screen, on-board memory
- Multiple users/monitors
- Multiple resolutions (640 x 480 to 1600 x 1280)

Single-Output 2D Graphics Subsystem (G1) — CLIN 0091AB

This CLIN, supported on the J-Class workstations, offers a single-output 2D HCRX graphics subsystem, which doubles the TAC-4 performance requirements. *The controller requires one GSC slot.*

Features

- Eight-plane double buffering built into the hardware
- Eight-plane overlay capability
- Multiple simultaneous displays in separate windows
- Non-interlaced resolution of 1280 x 1024 pixels

Multiple-Output 2D Graphics Subsystem (G2) CLIN 0091AC

This CLIN, supported on the J- and C-Class workstations, offers a multiple-output 2D HCRX graphics subsystem, which provides 8-plane double buffering built into the hardware. *The controller requires one GSC slot.*

Features

- Two 8-bit ports
- Multiple simultaneous displays (different for each user) in separate windows
- Non-interlaced resolution of 1280 x 1024 pixels

3D Graphics Subsystem (G3) CLIN 0091AD

This CLIN, supported on the J-Class workstations, offers a single-output 3D graphics subsystem, which provides 48 image planes per pixel with hardware double buffering in either 8/8 or 24/24 bit plane mode. The G3 subsystem is installed as an external unit with a GSC card.

Features

- Non-interlaced resolution of 1280 x 1024 pixels
- Eight overlay planes
- 24 Z-buffer planes
- Four control planes
- PowerShade software
- Assembly stand and accessories

Color Graphics Subsystem ♦CLIN 0091AE

This CLIN, supported on the J- and C-Class workstations, offers a single-output 2D HCRX graphics subsystem, which provides 8-plane double buffering built into the hardware. *The controller requires one GSC slot.*

Features

- One 8-bit port
- Single display
- Non-interlaced resolution of 1280 x 1024 pixels

HP VISUALIZE-8 Subsystem ♦CLIN 0092AB

The HP VISUALIZE-8 subsystem, supported on the J- and C-Class workstations, provides the best price/performance 3D solids accelerator. Designed for cost-sensitive customers doing complex visualization and component design work, this CLIN provides the same GUI and 3D wireframe performance as the base HCRX-8 subsystem. *The controller requires one GSC slot.*

Features

- Accelerated 3D surface rendering performance
- 8/8 double-buffered image planes
- Eight overlay planes
- 24-bit hardware Z-buffer
- HP Color Recovery Technology
- Non-interlaced resolution of 1280 x 1024
- Two image plane and overlay plane color maps
- PowerShade software
- PA-RISC based geometry accelerator

HP VISUALIZE-24 Subsystem ♦CLIN 0092AC

The HP VISUALIZE-24 subsystem, supported on the J- and C-Class workstations, provides the best price/ performance 3D solids accelerator with true color graphics. It is ideally suited for 3D component design, AEC plant design, medical imaging, and 3D visualization. This CLIN provides the same GUI acceleration and features of the base HCRX-24 subsystem with accelerated support for 3D solids and anti-aliased vectors. Additional color maps allow multiple true color applications to run concurrently without color map conflicts. *The controller requires one GSC slot.*

Features

- Accelerated 3D surface rendering performance
- Accelerated anti-aliased vectors
- 24 image planes (12/12 double-buffered)
- Eight overlay planes
- 24-bit hardware Z-buffer
- 16.7 million colors
- Non-interlaced resolution of 1280 x 1024
- Two image plane and overlay plane color maps
- PowerShade software
- PA-RISC-based geometry accelerator

HP VISUALIZE-8 and -24 Video Output Option ♦CLIN 0092AD

This video out option board, supported on the J- and C-Class workstations, provides video out capability for the VISUALIZE-8 and -24 products. With this option, users can select an area of the high resolution display for output to one of several analog video formats. *This CLIN must be ordered in conjunction with either CLIN 0092AB or 0092AC, and both require two GSC slots.*

Features

- User-selectable NTSC or PAL output, composite or S-Video
- Scale factors of 1, 1.5, or 2.0
- Anti-flicker circuitry

HP VISUALIZE-48 Subsystem ♦CLIN 0092AE

The HP VISUALIZE-48 subsystem, supported on the J- and C-Class workstations, is ideally suited for complex component design, sub-assembly design integration, scientific visualization, AEC concept design, and simulation markets. It supports cached texture memory for virtually unlimited texture sizes. True color double buffering and a high-speed data path provide smooth rotation and animation of images. Non-destructive overlay planes provide for fast menuing and overlay annotation support. *This CLIN requires three GSC slots.*

Features

- Accelerated 3D polygon performance
- Accelerated anti-aliased vectors
- Premiered textured polygon performance
- 48 image planes (24/24 double buffered)
- Eight overlay planes
- 24-bit hardware Z-buffer
- 16.7 million colors
- Non-interlaced resolution of 1280 x 1024
- Four image plane and two overlay plane color maps
- PowerShade software
- Three PA-RISC based geometry accelerators

HP VISUALIZE-48 Subsystem with 16-MB Texture Map Memory ♦CLIN 0092AF

This CLIN provides the VISUALIZE-48 Graphics Subsystem with the 16-MB texture map memory option and is supported on the J- and C-Class workstations. *This CLIN requires three GSC slots.*

HP VISUALIZE-48 Subsystem with Video Output ♦CLIN 0092AG

This CLIN provides the VISUALIZE-48 Graphics Subsystem with the video output option and is supported on the J- and C-Class workstations. *This CLIN requires three GSC slots.*

HP VISUALIZE-48 Subsystem with 16-MB Texture Map Memory and Video Output ♦CLIN 0092AH

This CLIN provides the VISUALIZE-48 Graphics Subsystem with the 16-MB texture map memory and video output options and is supported on the J- and C-Class workstations. *This CLIN requires three GSC slots.*

2D Graphics Card (for K-Class Server) ♦CLIN 0130AJ

This CLIN provides color 2D graphics support for the K-Class Servers (K220 and K420). *The controller requires one GSC slot.*

Features

- One 8-bit port
- Single display
- Non-interlaced resolution of 1280 x 1024 pixels

3.4.3 KEYBOARDS, TRACKBALLS, AND INPUT DEVICES

Hewlett-Packard offers the following input devices on the TAC-4 contract:

■ Keyboard with Trackball — for VME Portable Workstations (CLINs 0010AA, AB and AC)	♦CLIN 0010AK
■ Keyboard Type KB1 — Benign	CLIN 0065AB
■ Trackball Type TB2 — Benign	CLIN 0067AB
■ Mouse and Pad	CLIN 0067AD
■ Trackball Type TB2 — Benign	CLIN 0067AE
■ Interface for Second HMI Port (PS/2 Keyboard or Trackball)	CLIN 0065AD

Keyboard with Trackball – for VME Portable Workstations ♦CLIN 0010AK

This CLIN provides an attachable keyboard tray with drip-proof keypad and a three-button trackball for use with the Telos ACE VME Portable Workstations (CLINs 0010AA, 0010AB, and 0010AC).

Keyboard Type KB1 – Benign CLIN 0065AB

This HP Mini-DIN Type KB1 benign keyboard provides a 101-key, PC-style key layout. The keyboard generates the full ASCII 128-character subset and has a key switch life of 25 million cycles per key.

Features

- 101 keys in standard 101-key IBM PC layout
- QWERTY key arrangement indexed on F and J keys
- Fully debounced
- PS/2 compatibility
- Phantom key lockout
- Full ASCII 128-character subset
- Amber LED indicator lamps located directly beneath the SCROLL LOCK, NUM LOCK, and CAPS LOCK keycaps
- 12 user-programmable function keys

Trackball Type TB2 – Benign (Penny and Giles) CLIN 0067AB

This trackball from Penny and Giles has a high-quality, impervious slim design with three user-definable function buttons and an auxiliary "click and drag" fourth button. It also offers an intelligent serial interface. This CLIN includes a 2-inch diameter trackball.

Features

- Three user-programmable selection buttons
- PS/2 compatibility
- Minimum lifetime of 10 million keystrokes

Trackball Type TB2 – Benign (Evergreen) CLIN 0067AE

The Evergreen TB2 Benign trackball is a table-mount, standalone trackball device. This CLIN includes a 2-inch diameter trackball.

Features

- Three user-programmable selection buttons
- PS/2 interface
- Minimum lifetime of 10 million keystrokes

Mouse and Pad CLIN 0067AD

This mouse is ergonomically designed with smooth rounded edges to fit the hand and support the palm. It includes excellent tracking on almost any surface due to its self-cleaning ball.

Features

- 400-dpi resolution
- Three user-programmable buttons
- PS/2 interface

Interface for Second HMI Port — CLIN 0065AD

This CLIN is a device that hooks into any HP-HIL connector to allow for an additional PS/2- or HP-HIL-compatible input device. Up to three devices are supported per processor, which yields a maximum of four keyboards and four trackballs per system.

3.4.4 MASS STORAGE DEVICES

Today's environments share a common thread — demands for high-performance, high-capacity storage solutions with high reliability and availability for mission-critical applications. The mass storage solutions offered on the TAC-4 contract can fulfill these needs.

Hewlett-Packard is one of the industry's leading suppliers of mass storage products for the information technology market. HP manufactures a broad range of mass storage products including magnetic disk drives, optical disk drives, and RAID arrays. HP's products are known for high reliability and quality engineering. This dedication to quality produces some of the best Mean-Time-Between-Failure (MTBF) statistics in the industry. HP also recognizes the need for high throughput performance, and produces several disk products that use a fast-wide differential interface (FW-SCSI), providing up to eight times the bus throughput of compatible single-ended (SE-SCSI) disk solutions.

HP offers the following TAC-4 mass storage products, as described on subsequent pages in this section:

	PAGE
■ Floppy Drives	3.4-18
■ Hard Disk Drives in 1-GB, 2-GB, or 4-GB Capacities	3.4-19
— Internal	3.4-19
— External	3.4-20
— Removable and Hot-Pluggable	3.4-21
■ High Availability Storage Enclosures and Disk Modules	3.4-22
■ RAID Fixed Hard Disk Arrays	3.4-23
■ Tape Drives	3.4-24
■ Mass Storage Device Cables and Connectors	3.4-26

Floppy Drives

3.5-inch Floppy Disk Drive for the J-Class Workstation — CLIN 0047AA

This CLIN provides an internal single-ended SCSI interface DOS-compatible, 3.5-inch floppy disk drive with a maximum formatted capacity of 1.44-MB of data storage.

3.5-inch Floppy Disk Drive — Internal (PC Style) for the Series 700 Workstations — CLIN 0047AB

This CLIN provides an internal DOS-compatible interface 3.5-inch floppy disk drive for the Series 700 Workstations. This drive features a 250-Kbits/sec transfer rate (low-density), 500-Kbits/sec transfer rate (high-density), 3-msec track-to-track access time, and 15-msec seek time.

1.44-MB Floppy Drive — Internal (PC Style) for C-Class Workstations — ♦CLIN 0028AE

This CLIN offers an internal DOS-compatible (PC-style interface) floppy disk drive for C-Class Workstations. This drive features a 250-Kbits/sec transfer rate (low-density), 500-Kbits/sec transfer rate (high-density), 3-msec track-to-track access time, and 15-msec seek time.

Hard Disk Drives — Internal

Internal (1-GB) Fixed Hard Disk Drive — CLINs 0055AC and 0055AD

These CLINs each provide a 1-GB capacity fixed hard disk drive in a 3.5-inch low-profile form factor with 5400-rpm spindle speed, an average latency seek time of <15.1 msec, and a data transfer rate of 10-MB/sec (external bus asynchronous). These fixed hard disk drives are available with either a single-ended or fast-wide SCSI-2 interface.

This product is available as follows:

- 1-GB (SE-SCSI) — CLIN 0055AC
- 1-GB (FW-SCSI) — CLIN 0055AD

Internal (2-GB) Fixed Hard Disk Drive — CLINs 0028AG, 0055AF, and 0055AH

These CLINs each provide a 2-GB capacity fixed hard disk drive in a 3.5-inch low-profile form factor with 5400-rpm spindle speed, an average latency seek time of <15.1 msec, and a data transfer rate of 10-MB/sec (external bus asynchronous). These fixed hard disk drives are available with either a single-ended or fast-wide SCSI-2 interface.

This product is available as follows:

- 2-GB (FW-SCSI) for the HP Model C110 — CLIN 0028AG
- 2-GB (FW-SCSI) for the HP Model J210 and J210XC — CLIN 0055AF
- 2-GB (SE-SCSI) for the HP Model 712 and 748*i* — CLIN 0055AH

Internal (4-GB) Fixed Hard Disk Drive — ♦CLINs 0055AN and 0028AH

These CLINs each provide a 4-GB capacity fixed hard disk drive in a 3.5-inch half-height form factor with a 7200-rpm spindle speed, an average latency seek time of <12.2 msec, and a data transfer rate of 20-MB/sec (external bus asynchronous). This fixed hard disk drive is available with only a fast-wide SCSI-2 interface. *Installation of this drive reduces the system's environmental ambient temperature specification to 35°C.*

This product is available as follows:

- 4-GB (FW-SCSI) for the HP Model J210 and J210XC — ♦CLIN 0055AN
- 4-GB (FW-SCSI) for the HP Model C110 — ♦CLIN 0028AH

Hard Disk Drives — External

External (1-GB) Fixed Hard Disk Drive — CLIN 0055AE

This CLIN provides a 1-GB capacity fixed hard disk drive in an external package measuring 6.7" x 2.4" x 8.5" with a 5400-rpm spindle speed, an average latency seek time of <15.1 msec, and a data transfer rate of 10-MB/sec (external bus asynchronous). This external device is available with a single-ended SCSI-2 interface. This device includes an external SCSI cable, terminator, and a 125VAC power cord.

External (2-GB) Fixed Hard Disk Drive — CLIN 0055AG

This CLIN provides a 2-GB capacity fixed hard disk drive in an external package measuring 6.7" x 2.4" x 8.5" with a 5400-rpm spindle speed, an average latency seek time of <15.1 msec ,and a data transfer rate of 10-MB/sec (external bus asynchronous). This external device is available with a single-ended SCSI-2 interface. This device includes an external SCSI cable, terminator, and a 125VAC power cord.

External (4-GB) Fixed Hard Disk Drive — ♦ CLINs 0055AP and 0055AQ

This CLIN provides a 4-GB capacity fixed hard disk drive in an external package measuring 6.7" x 2.4" x 8.5" with a 7200-rpm spindle speed, an average latency seek time of <12.2 msec, and a data transfer rate of 20-MB/sec (external bus asynchronous). This extenal device is available with either a single-ended SCSI-2 or fast-wide SCSI-2 interface. This device includes an external SCSI cable, terminator, and a 125VAC power cord.

This product is available as follows:

- 4-GB External (SE-SCSI) ♦CLIN 0055AP
- 4-GB External (FW-SCSI) ♦CLIN 0055AQ

Hard Disk Drive Add-On (for the K-Class Server) — ♦CLINs 0130AG and 0130AH

These CLINs each provide a fast-wide, differential SCSI hard disk drive for the K-Class servers. This hard disk drive add-on product has an 8.5-msec average seek time, 4.17-msec device latency, a drive burst transfer rate of 5.9 – 9.0 MB/sec, and a 7200-rpm rotational speed.

This product is available as follows:

- 2-GB (FW-SCSI) ♦CLIN 0130AG
- 4-GB (FW-SCSI) ♦CLIN 0130AH

Hard Disk Drives — Removable and Hot-Pluggable

4-GB Removable Hard Disk Drive (for the VME Portable Workstation) ♦CLINs 0010AG and 0010AH

These CLINs each offer a 4-GB removable hard disk drive in a canister for the VME Portable Workstation. This drive offers a 7200-rpm spindle speed, an average latency seek time of <12.2 msec, and a data transfer rate of 20-MB/sec (external bus asynchronous). It is available with either a single-ended SCSI-2 or fast-wide SCSI-2 interface and includes a hard transit case.

This product is available as follows:

- 4-GB Removable (SE-SCSI) ♦CLIN 0010AG
- 4-GB Removable (FW-SCSI) ♦CLIN 0010AH

2-GB Removable Hard Disk Drive in Docking Canister CLIN 0057AB

This CLIN provides a 2.5-GB capacity (unformatted) fixed hard disk drive with a single-ended SCSI-2 interface. This drive, which is mounted in a docking canister, is used in conjunction with the Multi-drive Removable Hard Disk Drive Chassis (CLIN 0057AA).

Multi-Drive Removable Hard Disk Drive Chassis — External Desktop CLIN 0057AC

This CLIN provides a desktop enclosure that holds two removable 2-GB hard disk drives in a docking canister (CLIN 0057AB), which must be ordered separately. This device has a single-ended SCSI-2 interface.

2-GB Fast-Wide Hot-Pluggable Disk Drive (with Canister) for the D-Class Server ♦CLIN 0125AD

This CLIN provides a 2-GB capacity, fast-wide, differential SCSI-2, hot pluggable, low-profile, hard disk drive enclosed in a canister for the D-Class servers. This hard disk drive has an 8.5-msec average seek time, 4.17-msec device latency, a drive burst transfer rate of 5.9 to 9.0 MB/sec, and a 7200-rpm rotational speed.

High Availability Storage Enclosures and Disk Modules

High Availability Storage Enclosure — Deskside ♦CLIN 0060AA

This CLIN provides HP's latest generation of High Availability Storage Systems, which are among the industry leaders in capacity, performance, and reliability. This High Availability Storage Enclosure is flexible and scalable to meet ever-changing configuration requirements. It includes a FW-SCSI cable and external terminator.

This product features:

- Hot-pluggable data storage modules, power supplies, and cooling fans
- One or two SCSI-2 bus configurations
- Single-ended, fast-wide differential, or both interfaces
- Eight slots
- Support for up to eight low-profile disk drive modules or four half-height modules.

Note: *Cable and terminator are required for SE-SCSI disk modules.*

2.1-GB High-Performance Disk Module ♦CLINs 0060AE and 0060AF

These CLINs each provide a 2.1-GB capacity, low-profile, high-performance disk module for the High Availability Storage Enclosure (CLINs 0060AA and 0060AB). This disk module has a 7200-rpm rotational speed, interface transfer rate of 5/10 msec, 8.5-msec average seek time, 4.17-msec average latency, and an MTBF of 800,000 hours. It is available with either a fast-wide or single-ended SCSI-2 interface.

This high-performance disk module is available as follows:

- 2.1-GB Disk Module (SE-SCSI) ♦CLIN 0060AE
- 2.1-GB Disk Module (FW-SCSI) ♦CLIN 0060AF

4.3-GB High-Performance Disk Module ♦CLINs 0060AG and 0060AH

These CLINs each provide a 4.3-GB capacity, half-height, high-performance disk module for the High Availability Storage Enclosure (CLINs 0060AA and 0060AB). This disk module offers a 7200-rpm rotational speed, interface transfer rate of 5/10 ms, 8.5-msec average seek time, 4.17-msec average latency, and an MTBF of 800,000 hours. It is available with either a fast-wide or single-ended SCSI-2 interface.

This high-performance disk module is available as follows:

- 4.3-GB Disk Module (SE-SCSI) ♦CLIN 0060AG
- 4.3-GB Disk Module (FW-SCSI) ♦CLIN 0060AH

RAID Fixed Hard Disk Arrays

RAID Fixed Hard Disk Array (with Host Adapters) — CLINs 0059AA, 0059AD, 0059AE, and 0059AF

These CLINs each provide an external RAID fixed hard disk array with either a fast-wide or single-ended SCSI host adapter. They are available as either desktop or rack-mounted models. The RAID fixed hard disk array includes five 2-GB canistered disks (CLIN 0059AB) for a total of 10-GB. It features built-in drive failure and data recovery, built-in drive failure alarm, disk drive hot swap, adjustable rebuild rates, and drive capacity checking.

This product is available as follows:

- External, rack-mount with SE-SCSI host adapter — CLIN 0059AA
- External, desktop with FW-SCSI host adapter — CLIN 0059AD
- External, rack-mount with FW-SCSI host adapter — CLIN 0059AE
- External, desktop with SE-SCSI host adapter — CLIN 0059AF

RAID Fixed Hard Disk Drive — CLIN 0059AB

This CLIN provides a 2-GB fixed hard disk drive with a single-ended SCSI-2 interface for the RAID Disk Arrays (CLINs 0059AA, 0059AD, 0059AE, and 0059AF).

Tape Drives

Hewlett-Packard tape drives ensure maximum data reliability and media durability. The following HP tape drive devices are designed for the HP 9000 workstation and servers, and enhance the capabilities of the HP family of storage devices. The following tape drives are available on the TAC-4 contract, and are described on the following pages:

■ 4-GB DAT, 4-mm Tape Drive – Internal for C-Class Workstations	♦ CLIN 0028AJ
■ 4-GB DDS DAT Drive Module for the High Availability Storage Enclosure (CLIN 0060AA)	♦ CLIN 0060AJ
■ 2-GB DAT 4-mm Tape Drive – Internal for the C- and J-Class Workstations	CLIN 0061AC
■ 2-GB DAT 4-mm Tape Drive – External	CLIN 0061AD
■ 5-GB 8-mm Tape Drive – Internal for the C- and J-Class Workstations	CLIN 0061AE
■ 5-GB 8-mm Tape Drive – External	CLIN 0061AF
■ 4-GB DDS DAT 4-mm Tape Drive – Internal for J-Class Workstations and Servers	♦ CLIN 0061AH
■ 4-GB DDS DAT 4-mm Tape Drive – External for J-Class Workstations and Servers	♦ CLIN 0061AJ
■ 4-GB DDS DAT Drive – Internal for D-Class Servers	♦ CLIN0125AF

4-GB With Compression DAT 4-mm Tape Drive – Internal ♦CLIN 0028AJ

This digital/audio tape (DAT) drive for the C-Class workstations is a 4-GB capacity, 3.5-inch form factor tape drive with data compression and a single-ended SCSI-2 interface. It conforms to the DDS format standard for storing computer data and incorporates a data compression capability. This CLIN includes ten 120-meter cartridges and one cleaning cartridge.

4-GB DDS-2 DAT Drive Module ♦CLIN 0060AJ

This CLIN provides a 4-GB capacity, DDS-2, digital/audio tape drive module (SE-SCSI) for the High Availability Storage Enclosure (CLINs 0060AA and 0060AB).

Features

- 1.3-GB to 8.0-GB capacity
- 120 meters maximum tape length
- 1.6-inch form factor
- 510 to 1500 KB/sec data transfer rate

2-GB DAT 4-mm Tape Drive – Internal CLIN 0061AC

This CLIN provides an internal tape drive with a single-ended SCSI-2 interface for the C- and J-Class workstations. The drive stores 2 GB of data on a single 90-m, 4-mm tape cartridge (up to 4-GB with data compression). With a sustained transfer rate of 183 KB/sec, this drive can back up 2 GB of data in approximately three hours. This CLIN includes ten 2-GB 4-mm DAT cartridges and one cleaning cartridge.

2-GB DAT 4-mm Tape Drive – External CLIN 0061AD

This CLIN provides an external, 2-GB capacity, tape drive with a single-ended SCSI-2 interface mounted in a fully enclosed, standalone, self-powered external case. This CLIN also includes ten 90-meter 4-mm DAT cartridges, one cleaning cartridge, a 120 VAC power cable, a HDT550 to LDBL 9-meter cable, and a SE-SCSI terminator.

5-GB 8-mm Tape Drive – Internal CLIN 0061AE

This CLIN provides an internal, 5-GB capacity, 8-mm tape device with a single-ended SCSI-2 interface for the C- and J-Class workstations. This CLIN also includes ten 8-mm tape cartridges.

5-GB 8-mm Tape Drive – External — CLIN 0061AF

This CLIN provides an external, 5-GB capacity, 8-mm tape device with a single-ended SCSI-2 interface, which is fully enclosed in a standalone, self-powered case. This CLIN also includes ten 8-mm tape cartridges, 120-VAC power cable, HDT550 to LDBL 9-meter cable, and a SE-SCSI terminator.

4-GB DDS DAT 4-mm Tape Drive – Internal — ♦CLIN 0061AH

This CLIN for the J-Class workstation, provides an internal, 4-GB capacity, 4-mm tape device with a single-ended SCSI-2 interface for the J-Class workstations and servers. This CLIN also includes a 4-GB 4-mm DAT tape cartridge and a cleaning cartridge.

4-GB DDS DAT 4-mm Tape Drive – External — ♦CLIN 0061AJ

This CLIN provides an external, 4-GB capacity, 4-mm tape device with a single-ended SCSI-2 interface for the J-Class workstations and servers. It is fully enclosed in a standalone, self-powered case, and includes ten 120-meter 4-mm DAT cartridges, a cleaning cartridge, a 125 VAC power cable, a 1-meter SCSI cable, a SE-SCSI terminator, and a DDS cleaning cartridge.

4-GB DDS DAT Drive – Internal — ♦CLIN 0125AF

This CLIN provides a 4-GB DDS digital audio tape drive module add-on for the D-Class Servers (CLINs 0015AB and 0125AA).

Mass Storage Device Cables and Connectors	***CLIN***
Single SCSI Bus Configuration Cable	0060AK
One-Meter SE-SCSI Cable Kit (50-pin high-density to 68-pin high-density) (*Includes 68-pin, high-density, SE-SCSI terminator, required for use with High Availability Storage Enclosure, CLINs 0060AA and 0060AB*)	0060AL
Two-Meter SE-SCSI Cable Kit (50-pin high-density to 68-pin high-density) *(Includes 68-pin high-density, SE-SCSI terminator, required for use with High Availability Storage Enclosure, CLINs 0060AA and 0060AB)*	0060AM

3.4.5 MONITORS AND DISPLAY DEVICES

Hewlett-Packard offers three sizes of pedestal-mount color monitors for use with the TAC-4 workstations. An external LCD display and a flat panel display are available for the portable workstations. The monitors offered on the TAC-4 contract are:

■ External Color LCD Display Module (for the VME Portable Workstation)	♦CLIN 0010AD
■ 14-inch Pedestal-Mount Color Monitor	CLIN 0079AA
■ 17-inch Pedestal-Mount Color Monitor	CLIN 0080AA
■ 19-inch Pedestal-Mount Color Monitor	CLIN 0081AA
■ Color Flat Screen Display	CLIN 0081AN
■ X-Windows Terminal	CLIN 0083AJ
■ Console Terminal (for the D- and K-Class Servers)	♦CLIN 0125AL

External Color LCD Display Module ♦CLIN 0010AD

The color LCD display module for the ACE VME Portable Workstation is a high-resolution 12.9-inch display (1280 x 1024), which is available in several bundled configurations and as a standalone external display. It provides a rugged portable display unit that is attachable to the base unit as the primary display or as an additional secondary display. (See also CLINs 0010AE, 0010AF, and 0010AJ below.)

Features

- 1280 x 1024 resolution
- Small, lightweight, rugged design
- Wide range of AC/DC input power.

The following products are required for adding an external display device to the ACE VME Portable Workstation (CLINs 0010AB and 0010AC):

■ 8-bit VME Graphics Controller for an External CRT Display	♦CLIN 0010AE
■ 24-bit VME Graphics Controller for an External CRT Display	♦CLIN 0010AF

14-Inch Pedestal-Mount Color Monitor — CLIN 0079AA

This color monitor is a 14-inch pedestal-mount, display. This monitor provides front-panel controls for power, brightness, contrast, vertical and horizontal alignment.

Features

- Maximum brightness of 25 Foot-Lamberts
- Vertical scan frequency of 50–90 Hz and auto-sync capability
- Analog RGB, 75-ohm inputs with sync on green
- .28-mm dot pitch
- Non-interlaced display of 640 x 480 to 1280 x 1024 pixels
- Maximum pincushion and geometric distortion of 1.5 percent of the vertical picture height
- Raster size linearity within 1.5 percent of nominal size

17-Inch Pedestal-Mount Color Monitor — CLIN 0080AA

This monitor provides a non-interlaced display with resolutions from 640 x 480 to 1280 x 1024 pixels. It also has front panel controls for power, brightness, contrast, and vertical and horizontal alignments.

Features

- Maximum brightness of 25 Foot-Lamberts
- Vertical scan frequency of 50–90 Hz and auto-sync capability
- Analog RGB, 75 ohm inputs with sync on green
- .26-mm dot pitch
- Non-interlaced display of 640x480 to 1280x1024 pixels
- Maximum pincushion and geometric distortion of 1.5 percent of the vertical picture height
- Raster size linearity within 1.5 percent of nominal size

19-Inch Pedestal-Mount Color Monitor — CLIN 0081AA

This monitor provides a tilt/swivel pedestal, a flat-face color CRT, and controls for brightness, contrast, vertical and horizontal alignment, vertical and horizontal size, vertical and horizontal misconvergence, color temperature and pin-cushion correction.

Features

- Maximum brightness of 25 Foot-Lamberts
- Vertical scan frequency of 50–90 Hz and auto-sync capability
- Analog RGB, 75 ohm inputs with sync on green
- .31-mm dot pitch
- Non-interlaced display of 640 x 480 to 1280 x 1024 pixels
- Maximum pincushion and geometric distortion of 1.5 percent of the vertical picture height
- Raster size linearity within 1.5 percent of nominal size

Color Flat Screen Display — CLIN 0081AN

This CLIN is a VGA-compatible, multi-mode, flat-panel display system. The design features a 512-color, 10.4-inch diagonal liquid crystal display (LCD) with an integrated backlight. The display has a user-selectable 60-Hz or 72-Hz non-interlaced 640 x 480 pixel display resolution.

X Windows Terminal — CLIN 0083AJ

This CLIN is the HP ENVIZEX ‘p’ Series Model 20 CpS X-Station with a 33.3-MHz Intel I960 RISC processor, 6 MB of RAM, and 2 MB of video RAM. It has a 19-inch monitor with a 72-Hz refresh rate, and includes a PC-style keyboard and a trackball.

Console Terminal for the D- and K-Class Servers — ♦CLIN 0125AL

This CLIN is a 14-inch amber display console terminal with 8-pages of memory, 80/132 column, high-resolution characters, and full overscan. It is VT220 compatible.

3.4.6 NETWORKING PRODUCTS

Hewlett-Packard's highly diverse connectivity products offer balance, as well as power and scalability, in both processing and communications. This unique design paradigm is particularly important because it enables the TAC-4 community to move their networks into the late 1990s and beyond, as the network becomes the computer through the use of distributed computing solutions.

In the area of networking, HP products provide the industry's leading IEEE 802.3/Ethernet performance, based upon functionality built into all processor profiles, including portables and single-board computers. The systems also integrate transparently with existing multi-vendor local- and wide-area networks using industry-standard protocols such as FDDI, TCP/IP, Open Systems Interconnection (OSI), IEEE 802.5/Token Ring, and X.25.

BNC (ThinNet) and RJ45 (EtherTwist) transceivers are also offered. In addition, HP 9000 workstations permit expansion through a wide variety of industry-standard LAN, SCSI-2, and EISA plug-in boards available from HP and third-parties.

The following networking products are available on the TAC-4 contract:

Host Interfaces	***CLIN***
PCMCIA Interface (for High-Performance Rack-Mount Workstation/Server, CLIN 0023AA)	0023AD
PCMCIA Interface (for Medium-Performance Rack-Mount Workstation/Server, CLIN 0025AA)	0025AD
PCMCIA Interface (for High-Performance Desktop Workstation/Server, CLIN 0027AA)	0027AD
PCMCIA Interface (for Medium-Performance Desktop Workstation, CLIN 0029AA)	0029AD
PCMCIA Interface (for Low-Cost Desktop Workstation/Server, CLIN 0035AA)	0035AE
PCMCIA Adapter Mezzanine Card (for HP Model 743*i*)	0037AQ
Internal Fax Modem (for SAIC Galaxy or Talon Portable Workstations)	0031AF
Network Printer Interface	0063AR

Second Serial Port (for Low-Cost Desktop Workstation/Servers, CLINs 0035AA and 0035AH, 0036AA)	♦0036AH
Second Serial Port with LAN AUI (for Low-Cost Desktop Workstation/Servers, CLINs 0035AA and 0035AH, 0036AA)	♦0036AJ
Second Serial Port with X.25 (for Low-Cost Desktop Workstation/Servers, CLINs 0035AA and 0035AH, 0036AA)	♦0036AK
Second Monitor Port and Second LAN AUI (for Low-Cost Desktop Workstation/Servers, CLINs 0035AA, 0035AH, 0036AA)	♦0036AL
Second Monitor Port, for Two Monitors Total (for Low-Cost Desktop Workstation/Servers, CLINs 0035AA, 0035AH, 0036AA)	♦0036AM
16-Port Module (RJ45) (for D-Class Server, CLIN 0125AA)	♦0125AJ
16-Port Module (DB25) (for D-Class Server, CLIN 0125AA)	♦0125AK
FW-SCSI Card (for K-Class Server, CLINs 0130AA and 0130AB)	♦0130AK
Ethernet – ThinLAN/9000 Interface (HP-PB) (for K-Class Server, CLINs 0130AA and 0130AB)	♦0130AL
16-Port (RJ45) RS-232 MUX (HP-PB) (for K-Class Server, CLINs 0130AA and 0130AB)	♦0130AN
16-Port (DB25) RS-232 MUX (HP-PB) (for K-Class Server, CLINs 0130AA and 0130AB)	♦0130AP
16-Port (RJ45) RS-423 MUX (HP-PB) (for K-Class Server, CLINs 0130AA and 0130AB)	♦0130AQ
16-Port (DB25) RS-423 MUX (HP-PB) (for K-Class Server, CLINs 0130AA and 0130AB)	♦0130AR
16-Port RS-232 MUX Modem (HP-PB) (for K-Class Server, CLINs 0130AA and 0130AB)	♦0130AS
32-Port (RJ45) RS-232 MUX (HP-PB) (for K-Class Server, CLINs 0130AA and 0130AB)	♦0130AT
32-Port (DB25) RS-232 MUX (HP-PB) (for K-Class Server, CLINs 0130AA and 0130AB)	♦0130AU

IEEE 802.3/Ethernet 10Base5 Interface	0555AA
IEEE 802.3/Ethernet 10Base2 Interface	0555AC
IEEE 802.3/Ethernet 10BaseT Twisted Pair Interface	0555AE
IEEE 802.3/Ethernet 10BaseFP Interface	0555AG
IEEE 802.3/Ethernet 10BaseFL Fiber Optic Interface	0555AJ
IEEE 802.3 10BaseFL Card	0583AC
IEEE 802.3 10Base5 Card	0583AD
IEEE 802.3 10Base2 Card	0583AE
IEEE 802.3 10BaseT Card	0583AF
IEEE 802.3 10BaseFL Card	0585AC
IEEE 802.3 10Base5 Card	0585AD
IEEE 802.3 10Base2 Card	0585AE
IEEE 802.3 10BaseT Card	0585AF
ISDN Basic Rate Interface	0565AA
ATM Interface	0570AA
Blacker Router Interface	0591AA
DDN/MILNET/X.25 Router Interface	0592AA
Additional IEEE 802.3 10Base2 (ThinNet) Router Interface	0593AA
Additional IEEE 802.3 10Base5 (ThickNet) Router Interface	0594AA
FDDI Router Interface	0595AA
High-Speed Serial Router Interface (HSSI)	0596AA
Router Interface	0598AA
MIL-STD-1553B Interface	0615AA
IEEE 488 Interface (EISA Card)	0615AC
SCSI Controller Module (SE-SCSI)	0615AE
SCSI Controller Module (FW-SCSI)	0615AF

MIL-STD-1397 Interface Type B/A (VME Card)	0617AA
MIL-STD-1397 Interface Type C (VME Card)	0617AB
MIL-STD-1397 Interface Type H (VME Card)	0617AC
MIL-STD-1397 Interface Type A (VME Card)	0617AD
MIL-STD-1397 Interface Type D (VME Card)	0617AF
MIL-STD-1397 Interface Type E (VME Card)	0617AG
MIL-STD-1397 Parallel Interface (EISA Card)	0617AJ
MIL-STD-1397 Interface Type D (EISA Card)	0617AK
MIL-STD-1397 Interface Type E (EISA Card)	0617AL

Communications Hardware	***CLIN***
RS-232 Line Driver	0085AC
Centronics Line Driver	0085AE
EISA-to-VME Bridge Subsystem	0086AC
EISA-to-VME Bridge Subsystem — Low Smoke Cable	0086AD
8-Port MUX Card for D-Class Server (CLIN 0125AA)	0125AG
64-Port MUX Card for D-Class Server (CLIN 0125AA) ***Prerequisite:*** *must order either 16-port RJ45 module (CLIN 0125AJ) or 16-port DB25 module (CLIN 0125AK).*	0125AH
FDDI Single-Attached Station for K-Class Server (CLINs 0130AA and 0130AB)	0130AM
FDDI Single-Attached Station (EISA Card)	0551AA
FDDI Dual-Attached Station (EISA Card)	0551AC
FDDI Concentrator	0600AA
EISA 100VG-AnyLAN (EISA Card)	0553AA
EISA X.25 Link (EISA Card) *(Not supported on SMP)*	0554AA
Additional EISA X.25 Link *(Not supported on SMP)* ***Prerequisite:*** *must have CLIN 0554AA installed in same system.*	0554AB

IEEE 802.3/Ethernet-to-IEEE 802.3/Ethernet Repeater	0580AA
Multiport Repeater	0583AA
IEEE 802.3/Ethernet-to-FDDI Bridge	0585AA
ANSI X3T9.5 (FDDI)	0585AG
Multi-Protocol (CLNP/IP) Router	0590AA
Hardware Network Analyzer with Ethernet Connection	0601AC
Hardware Network Analyzer — FDDI Add-on (supports protocol decoding for ANSI standard FDDI)	0601AD
Hardware Network Analyzer — Remote Monitoring Add-on (supports a Remote Monitoring capability using SNMP and the Remote Monitoring MIB, as defined in RFC-1271)	0601AE
IEEE 802.3 Single-Port 10Base5 Transceiver	0611AA
IEEE 802.3 Four-Port 10Base5 Transceiver	0611AC
IEEE 802.3/Ethernet Single-Port 10Base2 (ThinNet) Transceiver	0611AE
IEEE 802.3 Four-Port 10Base2 Transceiver	0611AG
8-Channel Asynchronous Multiplexer (VME Card)	0619AA
16-Channel Asynchronous Multiplexer (VME Card)	0619AC
8-Port Serial Controller (EISA Card)	0619AD

3.4.7 OFFICE POWER DEVICES

This section describes the power devices designed for office or laboratory offered on the TAC-4 contract. See Section 4.5 for a description of shipboard power devices.

Overall, the power distribution subsystem components provide the following attributes:

- Conversion of the AC input sources to a nominal 120 VAC prior to distribution to the UPS
- Conditioning of input for surge and spike protection and conducted EMI reduction
- Isolation providing greater than 130 db of common mode rejection and re-reference to the grounding system of the installed equipment
- Power factor correction (for non-WHITE systems) in the front end of the UPS to meet the strict requirements of CE101 of MIL-STD-461D
- Correction for voltage and frequency deviations (for non-WHITE systems) by the double conversion UPS to provide a constant 120-VAC, 60-Hz output for all equipment.

Uninterruptible Power Supply (1.3 kVA) – Commercial Rack Mount ♦CLIN 0088AB

This CLIN provides the HP Power Trust 1.3-kVA commercial rack-mounted UPS designed to protect an entire system. The UPS provides complete protection against power problems by actually functioning before the AC power drops below the operating range of the HP 9000 processor. This CLIN is used in configurations mounted in the commercial rack (CLIN 0135AA).

Features

- Protects entire system against power line problems, including:
  - Brownouts/sags
  - Blackouts
  - Spikes/surges
  - Noise (EMI/RFI)
  - Harmonic distortion
- Autoranging
- Magnetic isolation

Uninterruptible Power Supply (1.8 kVA) – Commercial Rack Mount ♦CLIN 0088AC

This CLIN provides the HP Power Trust 1.8-kVA commercial rack-mounted UPS designed to protect an entire system. The UPS provides complete protection against power problems by actually functioning before the AC power drops below the operating range of the HP 9000 processor. This CLIN is used in configurations mounted in the commercial rack (CLIN 0135AA).

Features

- Protects entire system against power line problems, including:
  - Brownouts/sags
  - Blackouts
  - Spikes/surges
  - Noise (EMI/RFI)
  - Harmonic distortion
- Autoranging
- Magnetic isolation

Uninterruptible Power Supply (3.0 kVA) – Commercial Rack Mount ♦CLIN 0088AD

This CLIN provides the HP Power Trust 3.0-kVA commercial rack-mounted UPS designed to protect an entire system. The UPS provides complete protection against power problems by actually functioning before the AC power drops below the operating range of the HP 9000 processor. This CLIN is used in configurations mounted in the commercial rack (CLIN 0135AA).

Features

- Protects entire system against power line problems, including:
  - Brownouts/sags
  - Blackouts
  - Spikes/surges
  - Noise (EMI/RFI)
  - Harmonic distortion
- Autoranging
- Magnetic isolation

Uninterruptible Power Supply (0.6 kVA) – Floor-Standing ♦CLIN 0088AE

This CLIN provides the HP Power Trust 0.6-kVA commercial floor-standing UPS designed to protect an entire system. The UPS provides complete protection against power problems by actually functioning before the AC power drops below the operating range of the HP 9000 processor.

Features

- Protects entire system against power line problems, including:
  - Brownouts/sags
  - Blackouts
  - Spikes/surges
  - Noise (EMI/RFI)
  - Harmonic distortion
- Autoranging
- Magnetic isolation

Uninterruptible Power Supply (1.3 kVA) – Floor-Standing ♦CLIN 0088AF

This CLIN provides the HP Power Trust 1.3-kVA commercial floor-standing UPS designed to protect an entire system. The UPS provides complete protection against power problems by actually functioning before the AC power drops below the operating range of the HP 9000 processor.

Features

- Protects entire system against power line problems, including:
  - Brownouts/sags
  - Blackouts
  - Spikes/surges
  - Noise (EMI/RFI)
  - Harmonic distortion
- Autoranging
- Magnetic isolation

3.4.8 OFFICE RACKS AND ACCESSORIES

The following office racks and accessories are available on the TAC-4 contract. See Section 4.6 for a description of the racks and accessories designed for tactical and shipboard use.

High Availability Storage Enclosure – Commercial Rack-Mount CLIN 0060AB

HP's High Availability Storage Enclosure delivers flexibility and ease-of-use while providing critical functionality to support local workgroups or manage mission-critical data. The enclosure provides hot-pluggable power supplies, power cords, and cooling fans as well as hot-pluggable storage modules. The system supports up to eight 2-GB low-profile disk modules or four 4-GB half-height disk modules. (See also CLIN 0060AA in Section 3.4.4, *Mass Storage Devices*.)

Expansion RAM – Additional Memory Carrier (for the K420 Servers, CLINs 0130AA and 0130AB) CLIN 0130AF

This CLIN allows for the addition of a total of 1-GB of memory for the K420. The memory carrier has a total of 16 slots to add 32-MB memory modules (CLIN 0130AD) or 128-MB memory modules (CLIN 0130AE). Once the memory modules (SIMMs) are loaded, the carrier tray slides into the front of the system chassis.

1.6-Meter Commercial Rack (100/120V) ♦CLIN 0135AA

This rack is compatible with all HP 9000 servers and rack-mounted peripherals. The 1.6-meter cabinet includes fans and meets the 19-inch industry standard package. It also provides a cooling fan, front-to-rear air flow, and 100 mm of space in the rear of the cabinet for cable management and cooling.

Additional products compatible with this CLIN are:

- Rack-Mount UPS (CLINs 0088AB, 0088AC, and 0088AD)
- Filler Panel Kit (CLIN 0135AD)
- PDU (CLIN 0135AG)

Rack-Mount Kit for D-Class Servers (CLINs 0015AB and 0125AA) (for 1.6-Meter Commercial Rack, CLIN 0135AA) ♦CLIN 0135AB

This CLIN provides the rack-mount kit for the 1.6-meter commercial rack for the D-Class servers.

Rack-Mount Kit for K-Class Servers (CLINs 0015AC/AD and 0130AA/AB) (for 1.6-Meter Commercial Rack, CLIN 0135AA) ♦CLIN 0135AC

This CLIN provides the rack-mount kit for the 1.6-meter commercial rack (CLIN 00135AA) for the K-Class servers.

Filler Panel Kit (for 1.6-Meter Commercial Rack, CLIN 0135AA) ♦CLIN 0135AD

This CLIN is a set of six filler panels for the 1.6-meter commercial rack (CLIN 0135AA). Each filler panel is one Electronic Industries Association (EIA) unit of internal space. One EIA is equivalent to 1.75" or 44.5 mm.

Lockable Front Door (for 1.6-Meter Commercial Rack, CLIN 0135AA) ♦CLIN 0135AE

This CLIN provides a lockable front door accessory for the 1.6-meter commercial rack, which gives it a consistent appearance when it contains mixed product configurations. The door allows air flow for front-to-back cooling of computer products and peripherals. While the front door is lockable to limit unauthorized access, the master power switch is still readily accessible.

Rack Tie-Together Kit (for 1.6-Meter Commercial Rack, CLIN 0135AA) ♦CLIN 0135AF

This CLIN provides the rack tie-together kit for the 1.6-meter commercial rack.

PDU (for 1.6-Meter Commercial Rack CLIN 0135AA) ♦CLIN 0135AG

This CLIN provides a separately orderable additional PDU for the 1.6-meter commercial rack (CLIN 0135AA). The PDU supports 100/120 volts and a maximum of 16 amps. It is a single-phase with a North American plug (L5-20P). The PDU provides 10 receptacles.

3.4.9 PRINTERS

Hewlett-Packard is a highly diversified company with many different product offerings. Over the past ten years, however, printers have been Hewlett-Packard's most successful products. Hewlett-Packard is the leader in laser and inkjet printing, virtually inventing both product categories.

Hewlett-Packard printers are extremely successful because they are "no compromise" product choices. Users receive industry-leading performance, high-quality output, and significant value-added features at highly competitive prices. No other printer vendor offers such a compelling combination of performance and value. Some of the specific differentiating features of a Hewlett-Packard LaserJet Printer are:

- RISC-based processor for fast throughput
- True 600 x 600 dots per inch (dpi) high-resolution output at 300 x 300 dpi speed
- Resolution Enhancement Technology and a microfine toner for the highest quality laser printer output available
- Printer Control Language 5 (built-in) and PostScript support, with automatic switching between languages
- Multiple I/O options that enable the printer to handle input from multiple sources simultaneously.

Hewlett-Packard is also the market leader in inkjet printing. The DeskJet 1200C provides the best of both worlds — high-quality black-and-white printing, with full color printing capability. The primary features of the HP DeskJet are:

- RISC-based processor for fast throughput speed
- High-resolution black-and-white text (600 x 300 dpi), using Resolution Enhancement Technology for crisp output
- Striking color documents at 300 x 300 dpi, with up to 16.7 million colors
- Media flexibility accommodating plain paper, glossy paper, and transparencies
- Print speed of 6 pages per minute (ppm) for black and white, and color printing at a rate of 1–2 ppm
- Automatic switching between I/O types and printer languages (PCL 5, PostScript, and HP-GL/2).

The printers available on the TAC-4 contract are described on the following pages.

LaserJet 4 Plus
Non-Impact Standard-Performance Monochrome Printer (P1) CLIN 0063AA

This CLIN provides HP's LaserJet 4 Plus (Printer Type P1), which is suitable for printing durable, high-quality maps and charts used for mission planning, cockpit reference, and mission briefings. Memory expansion is available in 1-, 8-, or 16-MB SIMMs (CLINs 0063AB, 0063AS, and 0063AT) as memory expansion modules.

Features

- 600 x 600 dpi
- 45 built-in fonts, bar-code labeling
- Two paper trays
- 12 pages per minute (ppm)
- Automatic switching between printer languages (PCL 5, PostScript, HP-GL/2)
- Parallel and RS-232 port

LaserJet 4Si
Non-Impact Medium-Performance Monochrome Printer (P2) CLIN 0063AC

This CLIN provides HP's LaserJet 4Si (Printer Type P2), which has memory expansion available in 1- or 8-MB SIMMs (CLINs 0063AD and 0063AU).

Features

- 600 x 600 dpi
- 45 built-in fonts
- Bar-code labeling
- Two paper trays
- 17 ppm
- Automatic switching between printer languages (PCL 5, PostScript, and HP-GL/2)
- Parallel port

DeskJet 1200C
Non-Impact Standard-Performance Color Printer (P4) CLIN 0063AG

This CLIN provides HP's DeskJet 1200C (Printer Type P4), which has memory expansion available in 1- or 8-MB SIMMs (CLINs 0063AH and 0063AV).

Features

- 600 x 300 dpi for black and white; 300 x 300 dpi with 16.7 million colors
- Accommodates plain paper, glossy paper, and transparencies
- Black and white printing speed of 6 ppm
- Color printing speed of 1–2 ppm
- Automatic switching between I/O types and printer languages

DeskJet 1200C
Non-Impact High Performance Color Printer (P5) CLIN 0063AJ

This CLIN provides HP's DeskJet 1200C (Printer Type P5), which has memory expansion available in 1- or 8-MB SIMMs (CLINs 0063AK and 0063AW).

Features

- 600 x 300 dpi for black and white; 300 x 300 dpi with 16.7 million colors
- Accommodates plain paper, glossy paper, and transparencies
- Black and white printing speed of 6 ppm
- Color-printing speed of 1–2 ppm
- Automatic switching between I/O types and printer languages

Mannesman Tally – Narrow 24-pin Dot Matrix
Standard-Performance Monochrome Printer (P6) CLIN 0063AL

This CLIN provides the Mannesman Tally dot matrix printer (Printer Type P6).

Features

- 360 x 360 dpi
- Built-in diagnostics
- 206 characters per second (draft quality)
- 146 characters per second (near-letter quality)

3.4.10 VIDEO PRODUCTS

Rear Projection Screen for Large Screen Display — CLIN 0081AJ

This CLIN provides the standard, rear-projection screen with a black, anodized aluminum frame with stiffeners and attachment points suitable for shipboard mounting. The visible image area measures 60 inches diagonally and provides an aspect ratio of 4:3.

Front Projection Screen for Large Screen Display — CLIN 0081AK

This CLIN provides the standard, front-projection screen with a black, anodized aluminum frame with stiffeners and attachment points suitable for shipboard mounting. The visible image area measures 60 inches diagonally and provides an aspect ratio of 4:3.

Ceiling Mount Kit for Large Screen Display — CLIN 0081AL

This CLIN provides AmPro's Ceiling Mount Kit for the Large Screen Display (LSD). This kit provides a ceiling-mount assembly to support the LSD projector, and is constructed of black, anodized aluminum. It provides for two-point overhead mounting.

The kit features fine horizontal and vertical projector alignments, supported within the mount cradle, with controls from the remote control monitor. It can be removed and/or re-attached in five minutes or less.

Rear Mount Kit For Large Screen Display — CLIN 0081AM

This CLIN provides AmPro's Rear Mount Kit for the Large Screen Display (LSD). This kit provides a rear-mount assembly to support the LSD projector, which is resistant to ship vibrations. The kit is constructed of black, anodized aluminum and has fine horizontal and vertical projector alignments supported within the mount cradle. The kit can be removed and/or re-attached in five minutes or less.

Shielded Large Screen Display — CLIN 0081AQ

This CLIN provides AmPro's 3600 large screen projector display. This display provides high image quality through surface-mounted electronics and new integrated circuits, proprietary video amplifiers with improved linearity, and decoders and comb filters which preserve image detail and color balance plus excellent contrast (greater than 100 to 1) and bandwidth exceeding 100 MHz.

The performance specifications are:

- Brightness: 1000 lumens peak white, 220 ANSI lumens with overdrive power
- Contrast ratio: 100 to 1
- Input frequency range: 15–105 kHz

- Resolution: compatible with computer displays 2500 x 2000 pixels
- Bandwidth: electronic bandwidth of 100 MHz
- Lenses: 10 line pairs per millimeter for screen widths of 40 to 217 inches
- Full convergence in green
- CRT Technology: 8-inch electromagnetic focus with advanced electron gun technology that maintains high resolution at peak brightness.

Spare Parts Kit for Shielded Large Screen Display — CLIN 0081AS

This CLIN is a spare parts kit for the Shielded Large Screen Display (CLIN 0081AQ) that contains CRT assemblies with magnetic shields, a replacement power supply, PCBs, HVPS assemblies, CPU EPROM, and a remote control.

Video Frame Grabber — CLIN 0083AF

This CLIN provides a video frame grabber that displays 24-bit color video at 30 frames per second and captures frames at a minimum rate of one per second. The display has a resolution of 640 x 480 for NTSC, and 768 x 575 for PAL/SECAM. It supports two simultaneous video connections for NTSC, RS-330, or S-VHS; and displays one user-selectable video source at a time. This CLIN includes a single-slot EISA bus interface and a loadable device driver.

Color Video Camera — CLIN 0083AG

This CLIN provides a Pulnix Color Video Camera. This camera features NTSC-compatible video and a low-light sensitivity of 2 LUX. The camera interfaces with the video Frame Grabber (CLIN 0083AF) through its standard video outputs.

Interactive Video Telecommunications Information Exchange Subsystem — CLIN 0091AA

This CLIN provides a subsystem for teleconferencing up to 10 simultaneous conferees with voice over graphical images. This CLIN includes application software and the video frame grabber (CLIN 0083AF).

National Imagery Transmission Format (NITF) compliance is available through CLIN 0510AA. Additional components for various configurations of this subsystem include:

- Headset with Microphone and Audio Module (with Rack Plug Connector) — CLIN 0077AA
- Headset with Microphone and Audio Module (with 3.5-mm Plug Connector) — CLIN 0077AB
- Color Video Camera — CLIN 0083AG

Video Accessories

The following accessories for video products are also offered on the TAC-4 contract:

- Video Cable (10-foot) — CLIN 0037AV
  for interface between VME graphics accelerator cards (CLINs 0037AS and AT) and monitors with BNC connectors

- Console Cable Kit — CLIN 0037AW
  for connection between VME graphics accelerator cards (CLINs 0037AS and AT) and HP 743*i* serial port for ANSI terminal console operation

- Video Cable Adapter — ♦CLIN 0037AX
  for interface between VME graphics accelerator cards (CLINs 0037AS and AT) and monitors with a 15-pin DIN connector

- Video Cable Adapter — ♦CLIN 0037AY
  for interface between graphics accelerator cards (CLINs 0037AS and AT) and PS/2 keyboard (or mouse or trackball)

- Video Distribution Amplifier — CLIN 0085AN

- Video Linear Amplifier — CLIN 0085AQ

3.4.11 MISCELLANEOUS PRODUCTS

Headset with Microphone and Audio Module (with Rack Plug Connector) — CLIN 0077AA

This headset with microphone has a frequency response range of 100 Hz to 15 KHz. It includes a “push to talk” switch for the operator. This CLIN includes a 6-foot audio cable and a rack-plug connector.

Headset with Microphone and Audio Module (with 3.5-mm Plug Connector) — CLIN 0077AB

This headset with microphone has a frequency response range of 100 Hz to 15 KHz. It includes a “push to talk” switch for the operator. This CLIN includes a 6-foot audio cable and a 3.5-mm plug connector.

4.0 TACTICAL AND SHIPBOARD PRODUCTS

This section describes those products offered under the TAC-4 contract which are designed for and typically used in tactical environments such as shipboard, submarine, or combat situations. This section also explains the environmental color code designations that apply to tactical and shipboard requirements.

The TAC-4 hardware products described in this section include:

		PAGE
4.1	Ruggedized Rack-Mounted Systems	4-3
4.2	Ruggedized Portable Workstations and Options	4-11
4.3	Keyboards, Trackballs, and Input Devices	4-17
4.4	Rack-Mounted Monitors	4-19
4.5	Shipboard Power Devices	4-20
4.6	Shipboard Racks and Accessories	4-22
4.7	Tie-Down Kits	4-23
4.8	Transit Cases	4-25
4.9	Miscellaneous Products	4-28
	4.9.1 Cables and Connectors	4-28
	4.9.2 Encryption Products	4-29

For descriptions of those commercial hardware products that may be used in tactical and shipboard environments with the appropriate tie-down kit installed, see the corresponding product descriptions in Section 3.4, *Peripheral Products*.

Environmental Specifications

The hardware products offered on the TAC-4 contract are designed to comply with the environmental requirements specified in the TAC-4 contract and described as follows.

Tactical Environmental Designations

Designation	Description
Red	Shipboard and submarine combat situations where severe temperature and shock extremes are likely; mission critical.
Blue	Shipboard and submarine peacetime; not mission critical.
Gold	Transport. Intended primarily for transit cases that protect equipment in the non-operating state.
Green	Wheeled and tracked vehicle. Intended primarily for vehicles in combat and expeditionary situations.
Tan	Outdoors. Intended primarily for use in combat and expeditionary situations in an unsheltered, uncontrolled environment.

All hardware products on the TAC-4 contract have an environmental designation and are summarized in Appendix E, *Environmental Specifications*. For shipboard and submarine environments, Red and Blue environment codes apply. Red refers to mission-critical combat situations where severe temperatures and shock extremes are likely; Blue refers to peacetime situations that are not mission-critical.

Equipment designated for the Red environment is packaged in racks that come in two sizes, 72-inch and 60-inch. A 42-inch rack is also available for the Green environment only.

The Blue environmental requirements can be met by choosing White environment equipment and the appropriate tie-down kit, as explained in Section 4.7.

The ruggedized products described in this section, including the portable workstations and rack-mounted workstation/servers, meet MIL-S-901D shock tests, MIL-STD-167-1 shipboard vibration, MIL-STD-810E temperature/humidity, and select MIL-STD-461D/ 462D EMI/EMC requirements.

The COTR maintains a library of validated environmental test results for TAC-4 equipment as these tests take place during the life of the contract. Please contact the COTR, Doug Romig, at (619) 553-4086, 4263, or 4311 for CLIN-specific results.

4.1 RUGGEDIZED RACK-MOUNTED SYSTEMS

This section describes the TAC-4 ruggedized rack-mounted workstations and servers designed for tactical and shipboard environments. These systems are organized as follows:

Workstations	*CLIN*	*PAGE*
■ High-Performance Rugged Rack-Mounted Dual-Monitor Console	☑ 0001AA	4-5
■ High-Performance Rugged Rack-Mounted Single-Monitor Console	☑ 0003AA	4-6
■ Medium-Performance Rugged Rack-Mounted Single-Monitor Console	☑ 0005AA	4-7
Servers		
■ High-Performance Rugged Rack-Mounted Server	☑ 0007AA	4-8
■ Tactical Rugged Rack-Mounted Workstation/Server	☑ 0009AA	4-9
Base Processor		
■ High-Performance Rugged Rack-Mounted Model J210 Processor	0023AA	4-10

☑ *Represents a Preconfigured System Bundle.*

The TAC-4 ruggedized rack-mounted systems are all based on the **HP 9000 J-Class Workstation Model J210**, a high-performance UNIX-based graphics workstation with a 120-MHz CPU and a 512-KB cache (combined instruction and data). The HP Model J210 workstation can be configured with:

- one or two 19-inch pedestal-mount color monitors (1280 x 1024)
- up to 1 GB of RAM
- choice of internal 1-GB or 2-GB hard disk drives (FW-SCSI)
- up to two removable media devices (which include 3.5- and 5.25-inch floppy disk drives, CD-ROM, 2-GB 4-mm DAT, 4-GB 4-mm DDS DAT, and 5-GB 8-mm tape drives — all single-ended SCSI)
- a keyboard, mouse, or trackball
- UNIX operating system software.

The HP Model J210 has one integrated LAN interface (IEEE 802.3/Ethernet) and supports IEEE 488, MIL-STD-1553B, MIL-STD-1397 (Type D, E, and parallel), and an 8-port serial controller, as well as EISA 100VG-AnyLAN and EISA X.25 Link with EISA communication boards.

Descriptions of the rack-mounted systems begin on the following page. For customers with Government-furnished racks, HP can work with you to determine the best way to integrate these TAC-4 processors.

High-Performance Rugged Rack-Mounted Dual-Monitor Console (Model J210)

☑ CLIN 0001AA

Based on the HP 9000 Model J210 workstation, this CLIN presents the best features of HP high-performance PA-RISC processors in a 72-inch ruggedized rack. The Model J210 provides no-compromise, full computing power for unequaled system performance in technical and scientific software applications.

This dual-monitor, high-performance workstation utilizes HP's industry-leading 2D graphics to meet the needs of those in Computer-Aided Engineering and Electronic Computer-Aided Design. It is especially suitable for computational analysis, advanced 2D design work, and memory-intensive workloads in a shipboard or tactical environment.

Items Included in this Bundle	*CLIN*
• HP 9000 Model J210 with 64-MB RAM	0023AA
• 1-GB FW-SCSI Hard Disk Drive	0055AD
• 3.5" Floppy Disk Drive	0047AA
• 2-GB 4-mm DAT Tape Drive	0061AC
• Rugged Keyboard	0065AA
• Rugged Trackball	0067AA
• Bullnose Rugged HMI Housing	0043AC
• Two 19" Color Monitors	0081AB
• Multiple-Output 2D Graphics (G2)	0091AC
• Rugged 72-inch Rack	0039AA
• Removable I/O Power Panel	NSP*
• PDU	0043AA
• UPS	0087AQ
• Standard OS (HP-UX 2-User License)	0200AC
• Technical Manuals	NSP*
• LaserROM CD Electronic Documentation	NSP*

* *Not Separately Priced*

Features

- 120-MHz PA-RISC 7200 Processor
- 512-KB Cache (Combined Instruction and Data)
- 169 SPECint92, 271 SPECfp92
- 4370 SPECrate_int92, 7540 SPECrate_fp92
- ECC RAM Expandable to 1 GB
- 16 Memory SIMM Slots
- Maximum of Two Internal SE-SCSI Removable Media Devices
- Maximum of Two Internal FW-SCSI Fixed Hard Disk Drives
- One Asynchronous RS-232C Serial Port
- Centronics-compatible Parallel Printer Port
- IEEE 802.3 LAN Interface
- 16-bit Stereo Audio Input/Output

Comments/Special Instructions

This Preconfigured System Bundle is designed for the Red environment. CLINs 0003AA, 0005AA, 0007AA, and 0009AA offer additional configuration options based on the rugged, rack-mounted HP 9000 Model J210.

High-Performance Rugged Rack-Mounted Single-Monitor Console (Model J210)

☑ CLIN 0003AA

Based on the HP 9000 Model J210 workstation, this CLIN presents the best features of HP high-performance PA-RISC processors in a 72-inch ruggedized rack. The Model J210 provides no-compromise, full computing power for unequaled system performance in technical and scientific software applications.

This single-monitor, high-performance workstation utilizes HP's industry-leading 2D graphics to meet the needs of those in Computer-Aided Engineering and Electronic Computer-Aided Design. It is especially suitable for computational analysis, advanced 2D design work, and memory-intensive workloads in a shipboard or tactical environment.

Items Included in this Bundle	*CLIN*
• HP 9000 Model J210 with 64-MB RAM	0023AA
• 1-GB FW-SCSI Hard Disk Drive	0055AD
• 3.5" Floppy Disk Drive	0047AA
• 2-GB 4-mm DAT Tape Drive	0061AC
• Rugged Keyboard	0065AA
• Rugged Trackball	0067AA
• Bullnose Rugged HMI Housing	0043AC
• 19" Color Monitor	0081AB
• Single-Output 2D Graphics (G1)	0091AB
• Rugged 72-inch Rack	0039AA
• Removable I/O Power Panel	NSP*
• PDU	0043AA
• UPS	0087AQ
• Standard OS (HP-UX 2-User License)	0200AC
• Technical Manuals	NSP*
• LaserROM CD Electronic Documentation	NSP*

* *Not Separately Priced*

Features

- 120-MHz PA-RISC 7200 Processor
- 512-KB Cache (Combined Instruction and Data)
- 169 SPECint92, 271 SPECfp92
- 4370 SPECrate_int92, 7540 SPECrate_fp92
- ECC RAM Expandable to 1 GB
- 16 Memory SIMM Slots
- Maximum of Two Internal SE-SCSI Removable Media Devices
- Maximum of Two Internal FW-SCSI Fixed Hard Disk Drives
- One Asynchronous RS-232C Serial Port
- Centronics-compatible Parallel Printer Port
- IEEE 802.3 LAN Interface
- 16-bit Stereo Audio Input/Output

Comments/Special Instructions

This Preconfigured System Bundle is designed for the Red environment. CLINs 0001AA, 0005AA, 0007AA, and 0009AA offer additional configuration options based on the rugged, rack-mounted HP 9000 Model J210.

Medium-Performance Rugged Rack-Mounted Single-Monitor Console (Model J210)

☑ CLIN 0005AA

Based on the HP 9000 Model J210 workstation, this CLIN presents the best features of HP high-performance PA-RISC processors in a 60-inch ruggedized rack. The Model J210 provides no-compromise, full computing power for unequaled system performance in technical and scientific software applications.

This single-monitor, high-performance workstation utilizes HP's industry-leading 2D graphics to meet the needs of those in Computer-Aided Engineering and Electronic Computer-Aided Design. It is especially suitable for computational analysis, advanced 2D design work, and memory-intensive workloads in a shipboard or tactical environment.

Items Included in this Bundle	*CLIN*
• HP 9000 Model J210 with 32-MB RAM	0025AA
• 1-GB FW-SCSI Hard Disk Drive	0055AD
• 3.5" Floppy Disk Drive	0047AA
• 2-GB 4-mm DAT Tape Drive	0061AC
• Rugged Keyboard	0065AA
• Rugged Trackball	0067AA
• Bullnose Rugged HMI Housing	0043AC
• 19" Color Monitor	0081AB
• Single-Output 2D Graphics (G1)	0091AB
• Rugged 60-inch Rack	0039AB
• Removable I/O Power Panel	NSP*
• PDU	0043AA
• UPS	0087AQ
• Standard OS (HP-UX 2-User License)	0200AC
• Technical Manuals	NSP*
• LaserROM CD Electronic Documentation	NSP*

* *Not Separately Priced*

Features

- 120-MHz PA-RISC 7200 Processor
- 512-KB Cache (Combined Instruction and Data)
- 169 SPECint92, 271 SPECfp92
- 4370 SPECrate_int92, 7540 SPECrate_fp92
- ECC RAM Expandable to 1 GB
- 16 Memory SIMM Slots
- Maximum of Two Internal SE-SCSI Removable Media Devices
- Maximum of Two Internal FW-SCSI Fixed Hard Disk Drives
- One Asynchronous RS-232C Serial Port
- Centronics-compatible Parallel Printer Port
- IEEE 802.3 LAN Interface
- 16-bit Stereo Audio Input/Output

Comments/Special Instructions

This Preconfigured System Bundle is designed for the Red environment. CLINs 0001AA, 0003AA, 0007AA, and 0009AA offer additional configuration options based on the rugged, rack-mounted HP 9000 Model J210.

High-Performance Rugged Rack-Mounted Server (Model J210) ☑ CLIN 0007AA

Based on the HP 9000 Model J210 workstation/server, this CLIN presents the best features of HP high-performance PA-RISC processors in a 72-inch ruggedized rack. The Model J210 provides no-compromise, full computing power for unequaled system performance in technical and scientific software applications.

This high-performance workstation/server utilizes HP's industry-leading 2D graphics to meet the needs of those in Computer-Aided Engineering and Electronic Computer-Aided Design. It is especially suitable for computational analysis, advanced 2D design work, and memory-intensive workloads in a shipboard or tactical environment.

Items Included in this Bundle	*CLIN*
• HP 9000 Model J210 with 64-MB RAM	0023AA
• 2-GB FW-SCSI Hard Disk Drive	0055AF
• 3.5" Floppy Disk Drive	0047AA
• 2-GB 4-mm DAT Tape Drive	0061AC
• RAID Disk Array	0059AE
• Rugged Keyboard	0065AA
• Rugged Trackball	0067AA
• Flat Panel Input Display	0075AA
• Bullnose Retractable HMI Drawer	0043AD
• Rugged 72-inch Rack	0039AA
• Removable I/O Power Panel	NSP*
• PDU	0043AA
• UPS	0087AQ
• Standard OS (HP-UX 2-User License)	0200AC
• Software Network Analyzer	0601AB
• Technical Manuals	NSP*
• LaserROM CD Electronic Documentation	NSP*

* *Not Separately Priced*

Features

- 120-MHz PA-RISC 7200 Processor
- 512-KB Cache (Combined Instruction and Data)
- 169 SPECint92, 271 SPECfp92
- 4370 SPECrate_int92, 7540 SPECrate_fp92
- ECC RAM Expandable to 1 GB
- 16 Memory SIMM Slots
- Maximum of Two Internal SE-SCSI Removable Media Devices
- Maximum of Two Internal FW-SCSI Fixed Hard Disk Drives
- One Asynchronous RS-232C Serial Port
- Centronics-compatible Parallel Printer Port
- IEEE 802.3 LAN Interface
- 16-bit Stereo Audio Input/Output

Comments/Special Instructions

This Preconfigured System Bundle is designed for the Red environment. CLINs 0001AA, 0003AA, 0005AA, and 0009AA offer additional configuration options based on the rugged, rack-mounted HP 9000 Model J210.

Tactical Rugged Rack-Mounted Server (Model J210) ☑ CLIN 0009AA

Based on the HP 9000 Model J210 workstation/server, this CLIN presents the best features of HP high-performance PA-RISC processors in a 42-inch ruggedized rack. The Model J210 provides no-compromise, full computing power for unequaled system performance in technical and scientific software applications.

This high-performance workstation/server utilizes HP's industry-leading 2D graphics to meet the needs of those in Computer-Aided Engineering and Electronic Computer-Aided Design. It is especially suitable for computational analysis, advanced 2D design work, and memory-intensive workloads in a shipboard or tactical environment.

Items Included in this Bundle	*CLIN*
• HP 9000 Model J210 with 64-MB RAM	0023AA
• 2-GB FW-SCSI Hard Disk Drive	0055AF
• 3.5" Floppy Disk Drive	0047AA
• 2-GB 4-mm DAT Tape Drive	0061AC
• Rugged Keyboard	0065AA
• Flat Panel Input Display	0075AA
• Bullnose Retractable HMI Drawer	0043AD
• Rugged 42-inch Rack	0039AC
• Removable I/O Power Panel	NSP*
• PDU	0043AA
• GUPS/UPS	0087AQ
• Standard OS (HP-UX 2-User License)	0200AC
• Software Network Analyzer	0601AB
• Technical Manuals	NSP*
• LaserROM CD Electronic Documentation	NSP*

* *Not Separately Priced*

Features

- 120-MHz PA-RISC 7200 Processor
- 512-KB Cache (Combined Instruction and Data)
- 169 SPECint92, 271 SPECfp92
- 4370 SPECrate_int92, 7540 SPECrate_fp92
- ECC RAM Expandable to 1 GB
- 16 Memory SIMM Slots
- Maximum of Two Internal SE-SCSI Removable Media Devices
- Maximum of Two Internal FW-SCSI Fixed Hard Disk Drives
- One Asynchronous RS-232C Serial Port
- Centronics-compatible Parallel Printer Port
- IEEE 802.3 LAN Interface
- 16-bit Stereo Audio Input/Output
- Auto-selecting Power Supply (115v/230v)

Comments/Special Instructions

This Preconfigured System Bundle is designed for the Red environment. CLINs 0001AA, 0003AA, 0005AA, and 0007AA offer additional configuration options based on the rugged, rack-mounted HP 9000 Model J210.

High-Performance Rugged Rack-Mounted Workstation/Server (Model J210) — CLIN 0023AA

Based on the HP 9000 Model J210 workstation, this CLIN presents the best features of HP high-performance PA-RISC processors. The Model J210 provides no-compromise, full computing power for unequaled system performance in technical and scientific software applications.

Items Included in this CLIN

• HP 9000 Model J210 with 64-MB RAM	NSP*
• Rack-Mount Isolation Tray	NSP*
• Standard OS (HP-UX 2-User License)	0200AC
• Technical Manuals	NSP*
• LaserROM CD Electronic Documentation	NSP*

* *Not Separately Priced*

Features

- 120-MHz PA-RISC 7200 Processor
- 512-KB Cache (Combined Instruction and Data)
- 169 SPECint92, 271 SPECfp92
- 4370 SPECrate_int92, 7540 SPECrate_fp92
- Two Asynchronous RS-232C Serial Ports
- Centronics-compatible Parallel Printer Port
- IEEE 802.3 LAN Interface (AUI or UTP)
- 16-bit Stereo Audio Input/Output

Comments/Special Instructions

This CLIN is designed for the Red environment. A reproducible ***Custom Configuration Worksheet*** is available in Appendix B to facilitate custom configurations based on this processor. See also CLINs 0001AA, 0003AA, 0007AA, and 0009AA, which are rack-mounted system bundles based on the Model J210.

Note: *This CLIN (0023AA) includes 64-MB RAM. For the same configuration with 32-MB RAM, order* ***CLIN 0025AA****.*

4.2 RUGGEDIZED PORTABLE WORKSTATIONS AND OPTIONS

This section describes the TAC-4 ruggedized portable workstations designed specifically for tactical environments, the SAIC Talon and the Telos ACE VME.

The **SAIC Talon Field-Ready Portable Ruggedized Workstation** includes the HP Model 712/60 PA-RISC 64-bit processor with 32-bit data path. Developed for the Navy TAC-4 program, the Talon is fully software compatible with HP 9000 Series 700 workstations. This powerful, rugged, and portable workstation offers superb graphics capability. Features of the Talon Portable Workstation include:

- HP Model 712/60 processor
- 10.4-inch active color matrix internal LCD
- 2-GB removable hard drive
- optional mass storage expansion chassis
- 3.5-inch floppy disk drive
- external power module for either ship/shore or DC input power.

The SAIC Talon is offered in three memory configurations:

- 128-MB RAM SAIC Talon ♦CLIN 0011AG
- 64-MB RAM SAIC Talon ♦CLIN 0011AF
- 32-MB RAM SAIC Talon ♦CLIN 0033AH

The **Telos ACE VME Portable Workstation**, which includes the HP Model 743*i*/100 VMEbus Single-Board Computer, offers a TAC-4 solution with the portability and ruggedness necessary to support mobile command and communications, with the power of a high-performance workstation. The key to the system's flexibility is its modular design with a broad array of peripheral devices and communications options to meet the most demanding shipboard, airborne, and ground mobile requirements. Features of the Telos ACE VME Portable Workstation include:

- HP Model 743*i*/100 VMEbus board computer
- five 6U-slot VME card cage
- optional internal and external display capabilities
- 3.5-inch floppy disk drive
- two 4-GB, half-height, 3.5-inch removable disk drives (FW-SCSI)
- 4-mm DAT drive and CD-ROM
- power supply module with internal AC/DC auto power switching
- battery backup (10 minutes typical, dependent upon configuration).

The Telos ACE VME portable workstation is offered in two display configurations, with or without a liquid crystal display (LCD):

- Telos ACE VME Without LCD Display ♦CLIN 0010AA
- Telos ACE VME With LCD Display ♦CLIN 0010AB ♦CLIN 0010AC

The portable workstations offered on the TAC-4 contract are described on the following pages. The options offered for the rugged portable workstations follow the workstation descriptions.

SAIC Talon Portable Ruggedized Workstation

♦CLIN 0011AG

This CLIN provides the SAIC Talon field-ready portable ruggedized workstation, which includes the HP Model 712/60 processor.

This portable workstation supports an external 10.4" SVGA liquid crystal display (LCD).

Items Included in this Bundle

	CLIN
• HP 9000 Model 712/60 with 128-MB RAM	NSP*
• 10.4" SVGA Color Display	NSP*
• 3.5" Floppy Disk Drive	NSP*
• 2-GB Removable Hard Disk Drive	NSP*
• PCMCIA Slot	NSP*
• Keyboard with 3-Button Force Pad	NSP*
• Standard OS (HP-UX 2-User License)	0200AC
• DOS Windowing/Networking Environment	0475AA
• Technical Manuals	NSP*
• LaserROM CD Electronic Documentation	NSP*

* *Not Separately Priced*

Features

- 60-MHz HP PA-RISC 7100LC Processor
- 64-KB Cache (Combined Instruction and Data)
- 67.3 SPECint92, 87.3 SPECfp92
- One Asynchronous RS-232C Serial Port
- Centronics-compatible Parallel Printer Port
- External Single-Ended SCSI-2 Port
- IEEE 802.3 LAN Interface
- Battery Backup
- PCMCIA interface

Customer Installable Options

• Hard Transit Case	0093CA
• Replacement Battery	0045AF
• Fax Modem	0031AF
• 8-MB RAM Expansion	0031AB
• 16-MB RAM Expansion	0031AC
• 32-MB RAM Expansion	0031AD

Comments/Special Instructions

This bundle is designed for the Tan environment. To meet the shock and submersion requirements, the transit case is required.

Note: *This CLIN (0011AG) includes 128-MB RAM. To order the same configuration with 64-MB RAM, order* ***♦CLIN 0011AF****; for 32-MB RAM, order ♦CLIN 0033AH.*

VME Portable Workstation without LCD Display

♦CLIN 0010AA

This CLIN provides the Telos ACE VME Portable Workstation, which includes the HP Model 743*i*/100 VMEbus Single-Board Computer. The VME Portable Workstation offers the portability and ruggedness necessary to support mobile command and communications with the power of a high-performance workstation. The key to the system's flexibility is its modular design, enabling the user to select from a broad array of peripheral devices and communications options to meet the most demanding shipboard, airborne, and ground mobile requirements.

This portable workstation supports both an internal liquid crystal display (LCD), which is 12.9" with a resolution of 1280 x 1024, and external 14", 17", or 19" color monitors.

Shown here with optional LCD display module.

Items Included

Items Included	CLIN
• HP 9000 Model 743*i*/100 with 64-MB RAM	0037AG
• 3.5" Floppy Disk Drive	NSP*
• Two 4-GB Removable FW-SCSI Disks	0010AH
• 24-bit VME Graphics Controller	0010AF
• Peripheral Expansion Module with 4-mm DDS DAT Drive and CD-ROM Drive	NSP*
• 8-Channel Asynchronous Multiplexer (MIL-STD-188 Interface)	0010AJ
• Keyboard with 3-Button Trackball	0010AK
• Standard OS (HP-UX 2-User License)	0200AC
• Hard Transit Case	0010AL
• Technical Manuals	NSP*
• LaserROM CD Electronic Documentation	NSP*

* *Not Separately Priced*

Features

- 100-MHz HP PA-RISC 7100LC Processor
- 256-KB Cache (Combined Instruction and Data)
- 100.1 SPECint92, 137.0 SPECfp92
- ECC RAM Expandable to 256 MB
- Two Asynchronous RS-232C Serial Ports
- Centronics-compatible Parallel Printer Port
- External Single-Ended SCSI-2 Port
- IEEE 802.3 LAN Interface
- Five 6U-slot VME Card Cage
- Bay for Two Half-height 3.5" Removable Disk Drives with Canisters
- Power Supply Module with Internal AC/DC Auto-Switching Power
- Battery Backup

Customer Installable Options

• 32-MB RAM Expansion	0037AM
• 64-MB RAM Expansion	0037AN
• External Color LCD Display Module	0010AD

Comments/Special Instructions

This bundle is designed for the Tan environment. Refer to the ***Configuration Options Table*** in Appendix A for additional customer-installable options for this processor.

VME Portable Workstation with LCD Display

♦CLIN 0010AB

This CLIN provides the Telos ACE VME Portable Workstation, which includes the HP Model 743*i*/100 VMEbus Single-Board Computer. The VME Portable Workstation offers the portability and ruggedness necessary to support mobile command and communications with the power of a high-performance workstation. The key to the system's flexibility is its modular design, enabling the user to select from a broad array of peripheral devices and communications options to meet the most demanding shipboard, airborne, and ground mobile requirements.

This portable workstation supports an external liquid crystal display (LCD), which is 12.9" with a resolution of 1280 x 1024, and external 14", 17", or 19" color monitors.

Items Included

Items Included	CLIN
• HP 9000 Model 743*i*/100 with 128-MB RAM	0037AG
• 3.5" Floppy Disk Drive	NSP*
• Two 4-GB Removable FW-SCSI Disks	0010AH
• 8-bit VME Graphics Controller	0010AE
• Peripheral Expansion Module with 4-mm DDS DAT Tape Drive and CD-ROM Drive	NSP*
• Keyboard with 3-Button Trackball	0010AK
• External LCD Display Module (12.9" with 1280x1024 resolution)	0010AD
• Standard OS (HP-UX 2-User License)	0200AC
• Hard Transit Case	0010AL
• Technical Manuals	NSP*
• LaserROM CD Documentation	NSP*

* *Not Separately Priced*

Features

- 100-MHz HP PA-RISC 7100LC Processor
- 100.1 SPECint92, 137.0 SPECfp92
- 256-KB Cache (Combined Instruction and Data)
- ECC RAM Expandable to 256 MB
- Two Asynchronous RS-232C Serial Ports
- Centronics-compatible Parallel Printer Port
- External Single-Ended SCSI-2 Port
- IEEE 802.3 LAN Interface
- Five 6U-slot VME Card Cage
- Bay for Two Half-height 3.5" Removable Disk Drives with Canisters
- Power Supply Module with Internal AC/DC Auto-Switching Power
- Battery Backup

Customer Installable Options

• 32-MB RAM Expansion	0037AM
• 64-MB RAM Expansion	0037AN
• 8-Bit VME Graphics Controller	0010AE
• 24-Bit VME Graphics Controller	0010AF
• External Color LCD Display Module	0010AD

Comments/Special Instructions

This bundle is designed for the Tan environment. Refer to the ***Configuration Options Table*** in Appendix A for additional customer-installable options for this processor.

Note: *This CLIN (0010AB) includes two 4-GB removable FW-SCSI disks. To order the same configuration with two 4-GB removable SE-SCSI disks instead of the FW-SCSI disks, order* ***♦CLIN 0010AC****.*

Options for the Rugged Portable Workstations

8-Bit VME Graphics Controller for External CRT or LCD Display ♦CLIN 0010AE

This CLIN provides the Peritek VCL-V/8 VME single-board 34020-based (40-MHz) graphics display controller.

24-Bit VME Graphics Controller for External CRT or LCD Display ♦CLIN 0010AF

This CLIN provides the Peritek VCL-V/24 VME single-board 34020-based (40-MHz) graphics display controller.

Rugged Portable Expansion Chassis ♦CLIN 0045AE

This CLIN provides an expansion chassis for the SAIC Talon portable workstation. The expansion chassis has three half-height mass storage bays, including one 2-GB removable hard disk, and two 6U VME expansion slots. The unit contains battery backup (with rechargeable batteries), an external power module, and offers an optional hard transit case (CLIN 0093CB).

Replacement Battery ♦CLIN 0045AF

This CLIN provides a 20-cell Nicad replacement battery for 15 minutes of backup power. This CLIN is for both the SAIC Talon Rugged Portable Workstation (CLINs 0011AF, 0011AG, and 0033AH) and the Rugged Portable Workstation Expansion Chassis (CLIN 0045AE).

4.3 KEYBOARDS, TRACKBALLS, AND INPUT DEVICES

This section describes the keyboards, trackballs, and input devices designed for shipboard and tactical environments and offered on the TAC-4 contract.

Keyboard (Type KB1) for Rack Bullnose — CLIN 0065AA

This CLIN includes an 85-key keyboard with 12 function keys and 3 status indicators, and can generate the ASCII 128 character subset. The keyboard is spill-protected and has a silicone mat under the keys to protect against dust and splash. It includes a PS/2 connector, and is easily mounted and replaced in a bullnose.

Interface for Second HMI Ports (PS/2 Keyboard and Trackball) — CLIN 0065AD

This CLIN provides an interface for additional PS/2 keyboard and trackball or mouse combinations. It includes an interface module and cable for a maximum of three interfaces per workstation, which yields a potential total of four keyboards and trackball/mouse combinations per system.

Trackball Type TB1 (Rugged) — CLIN 0067AA

This CLIN provides a two-inch diameter trackball with three user-programmable selection buttons. It includes a PS/2 interface.

HMI Selection Switch — CLIN 0069AA

This CLIN provides a switch that selects between two keyboard and trackball or mouse combinations to control one processor.

Processor Selection Switch — CLIN 0069AB

This CLIN provides a switch that allows a single keyboard, trackball, and monitor combination to be used by four independent processors.

Flat Panel Display/Input Device — CLIN 0075AA

This CLIN provides an integrated touch, electroluminescent flat-panel display capable of functioning as a CCAEP with a microprocessor-driven interface. The unit has a macro command facility to generate fast buttons and legends for low software overhead.

Features

- Infrared overlay
- Luminescent flat panel (640 x 480)
- Emulates a VT100 or VT220 when mounted in a bullnose within a rack

Touch Sensitive Overlay — CLIN 0075AB

This CLIN provides a touch-sensitive overlay for the rack-mounted 19-inch color monitor (CLIN 0081AB), which allows the monitor to function as an input device. With its all-glass construction, it is impervious to dirt, grease, or water. The overlay has a resolution of 1024 x 1024 touch points.

4.4 RACK-MOUNTED MONITORS

This section describes the TAC-4 rack-mounted monitors designed for shipboard and tactical environments.

19-Inch Rack-Mount Color Monitor — CLIN 0081AB

This CLIN provides a flat-face color CRT with resolution from 640 x 480 to 1280 x 1024 pixels, controls for brightness, contrast, vertical and horizontal alignment, vertical and horizontal sizing, vertical and horizontal misconvergence, color temperature, and pin-cushion correction.

4.5 SHIPBOARD POWER DEVICES

The TAC-4 contract offers economical and reliable power devices that are suitable for both commercial and military power requirements. The TAC-4 power device products designed specifically for tactical and shipboard use are described below.

Power Distribution Unit (PDU) — CLIN 0043AA

This CLIN provides a power management and communications interface between the uninterruptable power supply, power conditioner, equipment loads, and the host computer. The PDU provides a means of power distribution from the UPS and power conditioner to eight NEMA 15A/115V receptacles, supporting both manual and computer controls of the load power.

Surge and Spike Protector (US Power) — CLIN 0087AA

This multi-stage device provides protection from power surges in excess of the equipment's normal operating range for US, shipboard, and submarine voltages. This CLIN includes a tie-down kit (CLIN 0087AB).

Surge and Spike Protector (Overseas Power) — CLIN 0087AC

This multi-stage device provides protection from power surges in excess of the equipment's normal operating range for overseas power. This CLIN includes a tie-down kit (CLIN 0087AD).

Isolation Transformer (1 kVA) — CLIN 0087AE

This device has a minimum capacity of 1 kVA and provides a minimum of 130 dB of isolation for common mode noise attenuation of AC power inputs. This CLIN includes a shipboard power conditioner (CLIN 0087AL) and tie-down kits (CLINs 0087AF and 0087AM).

Isolation Transformer (3 kVA) — CLIN 0087AG

This isolation transformer has a minimum capacity of 3 kVA, and provides a minimum of 130 dB of isolation for common mode noise attenuation of AC power inputs. This CLIN includes a shipboard power conditioner (CLIN 0087AL) and tie-down kits (CLINs 0087AH and 0087AM).

Shipboard Power Conditioner — CLIN 0087AL

This CLIN provides a power conditioner that filters incoming shipboard power. It includes a tie-down kit (CLIN 0087AM).

Type U1 UPS (2 kVA) — CLIN 0087AN

This CLIN provides a “Smart-UPS” 2000 VA service with a 220-VAC to 120-VAC step-down transformer. It provides battery charging during normal operations, senses brownout conditions, and boots output. It is bundled with power management and diagnostic software for graceful shutdown, status and testing, and power line and environmental monitoring. It also has a status lamp, audible alarm, and an RS-232C interface.

Type U2 UPS with Power Conditioner (2 kVA) — CLIN 0087AQ

The CLIN provides an online, ruggedized, 2000 VA uninterruptable power supply with power factor correction circuitry, a status lamp, audible alarm, software monitoring, 15-minute minimum battery backup, and automatic battery recharging. This device is designed for rack mounting with MIL-standard connectors.

Type U2 UPS (2 kVA) — CLIN 0087AR

This CLIN provides an online, double-conversion UPS rated for 2000 VA service with input power factor conversion circuitry.

Type GU1 GUPS (1.25 kVA) — CLIN 0089AA

This CLIN provides a 1250 VA service UPS designed for rack mounting with MIL-standard connectors.

4.6 SHIPBOARD RACKS AND ACCESSORIES

This section describes the TAC-4 racks and accessories designed to house equipment in shipboard or tactical environments.

Rugged 72-inch High Rack (Rack Type R1) — CLIN 0039AA

This CLIN is available for all 19-inch rack-mount equipment. The rack includes a power distribution unit (CLIN 0043AA) and blank panels for unoccupied openings of the removable I/O power panel (CLIN 0039AG). Rack material is aluminum with two welded extruded frames with tapped holes for attaching the side panels, thus allowing easy removal and easy access to the rack-mounted equipment, without having to access the inside of the rack. When assembled, the rack provides a drip-proof enclosure to protect all internally mounted equipment from drips when tilted up to 15 degrees.

Slide Out Rack Shelf — CLIN 0043AB

This CLIN provides a slide-out shelf that can fit into a 19-inch-wide rack. It is suitable for customization, such as attaching internal TAC-4 devices into the rack with tie-down kits.

Detailed Drawing Package for Bullnose Assemblies — CLIN 0043AJ

This CLIN provides detailed drawings for the bullnose assemblies, including measurements and cable pin-out information.

Detailed Drawing Package for Console Cabinet — CLIN 0043AK

This CLIN provides detailed drawings of the console cabinet.

Rack-Mount Full-Height Mass Storage Expansion Chassis — CLIN 0045AA

This rack-mount chassis contains four full-height or eight half-height drive mounting slots, a 300-watt power supply, rear I/O panel, and AC line on/off switch. The expansion chassis includes an internal drive power cabling for six SE-SCSI drives. It can be used to support 3.5- and 5.25-inch disk drives, CD-ROMs, and DAT drives.

Multi-Drive Removable Hard Disk Drive Chassis – External Rack-Mount (SE-SCSI) — CLIN 0057AA

This CLIN provides a rack-mount chassis that holds two removable 2-GB hard disk drives in docking canisters (CLIN 0057AB), *which must be ordered with this CLIN*.

4.7 TIE-DOWN KITS

The Blue environment requirements can be met by installing the appropriate tie-down kit on equipment designed for the White environment. The tie-down kit CLINs available for converting White equipment to the Blue environment include the following:

TIE-DOWN CLIN	ITEM DESCRIPTION	USED FOR CLIN
0027AE	High-Performance Desktop Workstation/Server Tie-Down Kit	0027AA
0029AE	Medium-Performance Desktop Workstation Tie-Down Kit	0029AA
0035AF	Low-Cost Desktop Workstation/Server Tie-Down Kit	0035AA
0045AC	External Mass Storage Tie-Down Kit (Lightweight)	0045AA
0045AD	External Mass Storage Tie-Down Kit (Heavyweight)	0045AA
0063AP	Printer Tie-Down Kit (Medium Weight) for Printer Types P1, P4, P5, P6, and P7	0063AA 0063AG 0063AJ 0063AM
0065AQ	Printer Tie-Down Kit (Heavy Weight) for Printer Types P2 and P3	0063AC 0063AE
0065AC	Keyboard Type KB1 with Tie-Down Kit	0065AB
0067AC	Trackball Tie-Down Kit	0067AB
0081AP	Color Flat Screen Display Tie-Down Kit	0081AN
0087AB	Surge and Spike Protector (US Power) Tie-Down Kit	0087AA
0087AD	Surge and Spike Protector Tie-Down Kit (Overseas Power)	0087AC
0087AF	Isolation Transformer (1 kVA) Tie-Down Kit	0087AE
0087AH	Isolation Transformer (3 kVA) Tie-Down Kit	0087AG
0087AM	Shipboard Power Conditioner Tie-Down Kit	0087AL 0087AE 0087AG
0087AP	Type U1 UPS (2 kVA) Tie-Down Kit	0087AN

TIE-DOWN CLIN	ITEM DESCRIPTION	USED FOR CLIN
0580AB	Repeater Tie-Down Kit	0580AA
0583AB	Multiport Repeater Tie-Down Kit	0583AA
0585AB	Multiport Bridge/Router Tie-Down Kit	0585AA
0590AB	Multi-Protocol Router Tie-Down Kit	0590AA
0600AB	FDDI Concentrator Tie-Down Kit	0600AA
0604AC	Shipboard TCU Tie-Down Kit	0604AB
0606AD	10Base FL Tie-Down Kit	0606AC
0611AB	10Base5 SP Transceiver Tie-Down Kit	0611AA
0611AD	10Base5 Four-Port Transceiver Tie-Down Kit	0611AC
0611AF	10Base2 Single-Port Transceiver Tie-Down Kit	0611AE
0611AH	10Base2 Four-Port Transceiver Tie-Down Kit	0611AG
0619AB	Multiplexer Tie-Down Kit	0619AA

4.8 TRANSIT CASES

This section describes the transit cases specifically designed for transporting hardware and equipment on the TAC-4 contract.

Transit Case ♦CLIN 0093CA

This transit case is designed for transporting the SAIC Talon Rugged Portable Workstation (CLINs 0011AF, 0011AG, and 0033AH).

Transit Case ♦CLIN 0093CB

This transit case is designed for transporting the SAIC Rugged Portable Expansion Chassis (CLIN 0045AE).

Transit Case ♦CLIN 0093CD

This transit case with concentric foam is 26" x 24" x 23" and is designed for transporting the following devices:

- HP Model J210 workstation (CLINs 0027AA and 0029AA)
- LaserJet 4 Plus printer (CLIN 0063AA)
- DeskJet 1200C printer (CLINs 0063AG and 0063AJ)
- 14-inch pedestal-mount color monitor (CLIN 0079AA)

Transit Case ♦CLIN 0093CE

This transit case with concentric foam is 32" x 32" x 26" and is designed for transporting the following devices:

- LaserJet 4Si printer (CLIN 0063AC)
- X-Windows Terminal (CLIN 0083AJ)
- 19-inch pedestal-mount color monitor (CLIN 0081AA)

Transit Case ♦CLIN 0093CF

This transit case with concentric foam is 34" x 28" x 14" and is designed for transporting the following devices:

- CD-ROM library (CLIN 0049AE)
- RAID fixed hard disk array (CLIN 0059AD)
- Mannesman Tally (P6) printer (CLIN 0063AL)
- Type U2 UPS with power conditioner (CLIN 0087AQ)
- Type GU1 GUPS (CLIN 0089AA)

Transit Case ♦CLIN 0093CG

This transit case with concentric foam is designed for transporting the Type 1 UPS (CLIN 0087AN). The overall dimensions are 34" x 28" x 18".

Transit Case ♦CLIN 0093CH

This transit case with concentric foam is designed for transporting trackballs (CLINs 0067AA and 0067AB) or the mouse and pad (CLIN 0067AD). The overall dimensions are 10" x 10" x 14".

Transit Case ♦CLIN 0093CJ

This transit case with concentric foam is 20" x 17" x 13" and is designed for transporting the following devices:

- 5.25-inch floppy disk drive (CLIN 0047AE)
- CD-ROM drive (CLIN 0049AC)
- 1-GB fixed hard disk drive (CLIN 0055AE)
- 2-GB fixed hard disk drive (CLIN 0055AG)
- 2-GB 4-mm DAT tape drive (CLIN 0061AD)
- Keyboard (Type KB1) (CLIN 0065AA)
- Surge and spike protector (CLIN 0087AA)
- Isolation transformer (CLIN 0087AE)

Transit Case ♦CLIN 0093CK

This transit case with concentric foam is 26" x 24" x 17" and is designed for transporting the following devices:

- HP Model 712/80 (CLIN 0035AA)
- Multi-drive removable hard disk drive chassis (CLIN 0057AC)
- Color flat screen display (CLIN 0081AN)
- Isolation transformer (CLIN 0087AG)

4.9 MISCELLANEOUS PRODUCTS

This section identifies the TAC-4 networking cables and connectors used in tactical and shipboard environments. It also lists the encryption products available on the TAC-4 contract.

4.9.1 CABLES AND CONNECTORS

The following networking cables and connectors are available on the TAC-4 contract, in addition to the commercial networking products listed in Section 3.4.7.

	CLIN
Connector, FDDI TCU	0041AG
Connector, Graphics Monitor	0041AH
Connector, SDMS	0041AM
Connector, Keyboard/Trackball Pairs	0041AN
Connector, SCSI (Single-Ended)	0041AP
Connector, SCSI (Differential)	0041AQ
Connector, SCSI (Fast-Wide)	0041AR
Connector, SCSI (Fast-Wide)	0041AS
Connector, NTDS Type A, B, C, H, (MIL-STD-1397)	0041AT
Connector, NTDS Type E TRIAX	0041AU
Connector, MIL-STD-1553 (BJ78)	0041AV
Connector, RJ11	0041AY
Connector, RJ45	0041AZ
Connector, Mating Military Power Connector (MS3400DV20B4S)	0041BB
Connector, DB9 (Female)	0041BC
Cable Assembly, External AC Power	0042AA
Shipboard Small Interconnection Box	0602AD
Shipboard Large Interconnection Box	0602AE
Shipboard Interconnection Box Connector Patch Panel	0602AF
Shipboard Interconnection Box Splice Tray Kit	0602AG

Shipboard Fiber Optic Installation Connector Kit	0603AC
Shipboard Fiber Optic Installation Tool Kit	0603AD
Shipboard TCU	0604AB
25-Foot Fiber Optic Cable	0605AA
10-Foot Fiber Optic Cable	0605AB
Shipboard Fiber Optic Feeder Cable	0605AC
Shipboard Fiber Optic Cable Component	0605AD
Shipboard Fiber Optic Trunk Cable	0605AE
Micro F/O Transceiver with ST Connector	0606AC
Shipboard 10Base5 (ThickNet) LAN Installation Kit	0609AB
Shipboard 10Base2 (ThinNet) LAN Installation Kit	0609AE
Shipboard 10Base5 (ThickNet) LAN Cable	0610AC
Shipboard 10Base2 (ThinNet) LAN Cable	0610AE

4.9.2 ENCRYPTION PRODUCTS

The following encryption products are available on the TAC-4 contract:

	CLIN
Type 1 Cryptography Based Secure Network Interface	0653AA
Type 1 Cryptography Based Secure Network Key Management System	0653AB
Type 1 Cryptography Based Secure Network Blank Keys	0653AC
SCSI Bus Encryption System	0655AA
SCSI Bus Key Management System	0655AB
SCSI Bus Encryption Device Blank Keys	0655AC
Serial Port Encryption Device	0655AD

This page was intentionally left blank
for double-sided reproduction.

5.0 SOFTWARE PRODUCTS

Hewlett-Packard offers a wide variety of software products to enable TAC-4 customers to effectively develop and run applications on TAC-4 equipment. This section presents an overview of the software offered on the TAC-4 contract and identifies the software products available. The software CLINs are organized and presented as follows:

	PAGE
5.1 Operating System Software	5-3
5.2 Compiler Software	5-7
5.3 Network Software	5-9
5.4 Database, Server, and Connectivity Software	5-11
5.5 DOS Windowing Software	5-16
5.6 Graphical User Interface Products	5-17
5.7 Graphics Software	5-18

License Types

The TAC-4 contract distinguishes a “Software Developer” from an “End-User.” A software developer is defined as one who purchases compilers and software development packages. An end-user does not perform software development, but is a user of an application developed by a software developer. In general, the CLIN structure clearly identifies software compilers and development packages typically used by software developers.

Note that there is an additional distinction between software CLINs for products with a developer’s software license and products with only a run-time license. In general, run-time versions require less disk space and are simpler to operate. When HP is unable to determine whether a particular delivery order is for a developer or an end-user, the developer’s version will be integrated/shipped.

TAC-4 software product licensing is based on the client-server model, which implies that a number of workstations are connected on a Local Area Network (LAN), with one or more of the workstations designated as a server to the LAN.

There are two types of licenses available to support this client/server model:

1. End-user or single-user license
2. Floating or concurrent-user license.

End-user licensing is very straightforward. Each user buys the software needed for his/her system. The software is loaded onto the system, and is available to execute only on that particular system. Other users on the network who have access to that system may use that single-user software as long as it executes on the system that owns the license. A Single-User License is the default for TAC-4 software products.

The floating or concurrent user license provides a flexible and cost-effective structure for the software development environment. This allows the Government to create a pool of "right-to-use licenses" on a designated workstation or server. For example, in a department of 20 software engineers, each with individual workstations connected over a LAN, the department manager might buy a C and Assembler SEE 1–5 user license. In this scenario, one of the systems is the license server, and the software is loaded on all 20 systems. When an engineer begins to execute the compiler on his/her system, the license server checks to ensure that only four or fewer people are currently running the compiler on their machines. If so, the engineer is allowed to execute the program and is registered on the server as an active user. When five users are active at the same time (i.e., concurrently), access is denied until one of the users of that software finishes with the compiler. Note that each user who is executing the compiler is using his/her system to achieve maximum performance.

In general, HP recommends purchasing the smallest license configuration appropriate. Even in large departments, typically only a few engineers would be executing the same software product at the same time. Additional copies of small license configurations may be purchased, if needed, to improve performance or increase the total number of concurrent users. This incremental approach allows the Government to avoid an expensive purchase for concurrent access which may not be necessary.

Application Software

For all custom configurations, HP will pre-load software applications onto the system disk prior to shipment from the factory. License data files will also be included to unlock the software products. User configuration changes can be made upon receipt of the system. For software ordered on the TAC-4 contract, HP ships:

- recovery media on 4-mm DAT tape for the HP Series 700 systems or on CD-ROM for the HP Series 800 systems
- documentation
- hard copy of the license file.

Software applications ordered as stand-alone CLINs ship with:

- a copy of the software on 4-mm DAT tape
- documentation
- an entitlement to receive an authorization code to unlock the software product.

When the product is received, the customer completes the entitlement with the system information and faxes it to HP for redemption. HP will determine the authorization code for the software product purchased and fax the information back. The customer then enters the authorization codes to unlock the software products.

5.1 OPERATING SYSTEM SOFTWARE

Most TAC-4 Preconfigured System Bundles and standalone systems are shipped with the TAC-4 Standard Operating System (CLIN 0200AC) pre-loaded on the system hard disk drive. The exceptions are those CLINs based on the HP 9000 Model 743*i*, Model 748*i* VMEbus Board Computers, and the HP Model V743 VXI, in which case the operating system software is supplied on 4-mm DAT tape.

The Standard Operating System (OS) is the commercial release of HP-UX (and includes unique TAC-4 peripheral drivers), and is shipped with a two-user license to allow for both workstation and LAN connection capability. When ordering the Secure Operating System (CLIN 0200AD), the Standard Operating System (HP-UX) will be pre-loaded and a license to run a Secure Operating System will be shipped.

HP recommends that you consider ordering the Three-user Standard OS (CLIN 0200AF) or the Three-user Secure OS (CLIN 0200AG). These CLINs actually include an eight-user license, providing for nearly any configuration found within the TAC-4 community. This extra license capability offers the added benefit of support for the following typical TAC-4 system requirements:

- Multiple keyboard/input device configurations
- Use of multiple-output G2 graphics subsystem (i.e., CLIN 0091AC)
- Multiple serial logins (e.g., modems, DTC, MUX, terminal, SLIP, or PPP connections)
- Personal computers (except when running UNIX or X-Windows terminal emulations).

In addition to the Standard OS, the Real-Time OS license (CLIN 0200AE) is shipped with HP's Real-Time Computer systems, which include the HP Model 743*i* VMEbus and HP Model V743 VXI computers on this contract. The Real-Time OS CLIN is a license to run a real-time kernel developed from the Real-Time OS Development Environment (CLIN 0203AA).

The operating system products available on the TAC-4 contract are described on the following pages.

Standard OS (HP-UX 2-User License) CLIN 0200AC

The TAC-4 Standard Operating System is HP-UX 10, a UNIX-based operating system that complies with IEEE POSIX 1003.1, FIPS 151-2, ANSI X3.159-1989, System V Interface Definition (SVID) Issue III, X/Open Portability Guide Issue IV (XPG4), and OSF/Motif 1.2. HP-UX provides support for an extensive set of applications including a mail system, a menu-driven Systems Administration Manager, support of 22 languages, an enhanced X Window system, TCP/IP, and a library management tool (CLIN 0285AA). This CLIN includes a two-user license.

Comments

Pre-loaded on all Preconfigured System Bundles, Servers, and Workstations.
Not separately priced.

Secure OS CLIN 0200AD

The TAC-4 Secure Operating System is HP-UX CMW (Compartmented Mode Workstation). HP-UX CMW includes support for the HP-UX trusted operating system, trusted networking, and trusted user-interface technology, including Motif and X-Windows clients. This CLIN includes a two-user license.

Comments

Supported on all Preconfigured System Bundles, Servers, and Workstations except the Model 743*i*. *(Required disk space: 349,481 KB)*

Real-Time OS CLIN 0200AE

This CLIN provides a single-user license to run the real-time kernel developed from the Real-Time OS Development Environment (CLIN 0203AA).

Comments

Included with the Model 743*i*/64, 743*i*/100, 748*i*/64, and 748*i*/100.
Not separately priced.

Three-User Standard OS CLIN 0200AF

This CLIN provides software licensing for up to eight users for the Standard OS (CLIN 0200AC).

Comments

Prerequisite: *CLIN 0200AC.*

Three-User Secure OS — CLIN 0200AG

This CLIN provides software licensing for up to eight users for the Secure OS (CLIN 0200AD).

Comments

Prerequisite: *CLIN 0200AD.*

Real-Time OS Development Environment — CLIN 0203AA

This CLIN provides the tools to develop (compile, link, download, and debug) a real-time operating system for the HP Model 743*i*. It supports C, ANSI C, C++, and PA-RISC Assembly languages (single-user license). The development environment will run on the Standard OS (CLIN 0200AC).

Comments

Prerequisite: *CLINs 0200AC and 0205AA.*

Real-Time OS Development Environment with Ada — CLIN 0203AB

This CLIN provides the ADA Development Environment for the Real-Time OS (CLIN 0203AA)

Comments

Prerequisite: *CLINs 0200AC, 0203AA and 0205AA.*

NOTE:
The following software products (CLINs 0140AB, 0140AC, 0140AD, 0140AE, 0140AF, and 0141AA) apply to HP-UX 10.X, the Operating System for the D- and K-Class Servers.

8-User Standard OS — CLIN 0140AB

This CLIN provides HP-UX 10.X OS software for up to eight users on the D- and K-Class Servers only.

16-User Standard OS — CLIN 0140AC

This CLIN provides HP-UX 10.X OS software for up to 16 users on the D- and K-Class Servers only.

32-User Standard OS — CLIN 0140AD

This CLIN provides HP-UX 10.X OS software for up to 32 users on the D- and K-Class Servers only.

64-User Standard OS — CLIN 0140AE

This CLIN provides HP-UX 10.X OS software for up to 64 users on the D- and K-Class Servers only.

Unlimited User Standard OS — CLIN 0140AF

This CLIN provides HP-UX 10.X OS software for unlimited users on the D- and K-Class Servers only.

TAC-4 Server OS Additions — CLIN 0141AA

This CLIN offers additional OS functionality and is provided with the D- and K-Class Servers only. *Not separately priced.*

5.2 COMPILER SOFTWARE

The software compilers offered under the TAC-4 contract include C, C++, FORTRAN, Ada, and COBOL. Most are available in either a single-user configuration or a variety of multiple-user configurations. Please refer to the CLIN Table in Appendix D for the multiple-user configuration options.

C and Assembler SEE: Single-User License — CLIN 0205AA

This CLIN, the HP C/ANSI C compiler, is operable with the POSIX-compliant HP-UX operating system in the Software Engineering Environment (SEE) and optimized for the PA-RISC architecture. It includes the SoftBench interactive symbolic debugger (SoftDebug), and the user-friendly interactive SoftBench editor that automatically formats code, both with a graphical user interface.

Comments

(Required disk space: 67,753 KB)

C++ SEE: Single-User License — CLIN 0210AA

This CLIN, the HP C++ compiler, which is POSIX compliant, is based on USL C++ 3.0. In addition, it supports exception handling according to ANSI C++, allows interactive source level debugging, and supports object-oriented database management.

Comments

Prerequisite: *CLIN 0205AA. (Required disk space: 20,863 KB)*

FORTRAN SEE: Single-User License — CLIN 0215AA

This CLIN, HP's FORTRAN 77 compiler, is POSIX-compliant and a superset of ANSI X3.9.1978 and FIPS 69-1 FORTRAN standards.

Comments

Prerequisite: *CLIN 0205AA. (Required disk space: 14,435 KB)*

Ada SEE: Single-User License — CLIN 0220AA

This CLIN is an optimized ADA compiler. It includes the SoftBench code construction environment; bundled with X Windows and MOTIF bindings. It also includes a debugger, Ada text editor, and code formatter.

Comments

Prerequisite: *CLIN 0200AC and CLIN 0205AA. (Required disk space 191,401 KB)*

COBOL SEE: Single-User License — CLIN 0225AA

This CLIN provides HP's COBOL compiler, an enhanced version of MicroFocus COBOL/2. HP COBOL can create programs to use SQL, integrate an RDBMS pre-compiler, and compile ANSI (FIPS Pub21-3) at a minimum of 2000 lines per minute. It includes a debug tool and COBOL editor.

Comments

Prerequisite: *CLIN 0205AA. (Required disk space: 27,383 KB)*

5.3 NETWORK SOFTWARE

The network software products available on the TAC-4 contract include the following CLINs. Additional networking products are described in Section 3.4.6.

OSI Protocol Suite — CLIN 0555AL

The OSI Protocol Suite provides support for applications through the logical-link sub-layer (for the full OSI Basic Reference model).

Comments

(Required disk space: 45,289 KB)

OSI Application Program Interface — CLIN 0555AM

This CLIN provides the necessary software modules to provide interface support for X.400 Message Handling Services.

Comments

Included in CLIN 0555AL.

X.400 Special-Purpose User Agent Development Package — CLIN 0560AA

This CLIN provides for the acceptance of data from various LAN inputs and forwards the data in X.400 envelopes.

Comments

Prerequisite: *CLIN 0555AL. (Required disk space: 12,150 KB)*

X.400 Application Program Interface — CLIN 0560AB

This CLIN allows for the development of special user agents for X.400 information transfer.

Comments

Included in CLIN 0560AA.

FTP/FTAM Gateway Functions — CLIN 0575AB

This CLIN provides application layer bridging among FTP and FTAM (File Transfer, Access, and Management).

Comments

Prerequisite: *CLIN 0555AL*

Software Network Analyzer — CLIN 0601AB

This CLIN allows monitoring of the network load in real-time or over long periods of time. The monitoring reports in terms of time, source, destination, protocol, and packet size with visible alarm thresholds. This software also features reporting, packet decoding of many protocols, and a graphical interface.

Comments

See also Hardware Network Analyzer (CLINs 0601AC, 0601AD, and 0601AE).
(Required disk space: 66,021 KB.)

OSI Network Manager Application — CLIN 0626AA

This CLIN provides the capability to manage a network by displaying a graphical, logical map of the managed network, with operational and non-operational status of each node. Training from the OEM, Harris Corporation, is recommended.

SNMP Network Manager Application — CLIN 0627AA

This CLIN is an X11-based network management application that fully complies with RFC-1157 and supports all applicable Internet standards. It includes a run-time version of HP's OpenView Network Node Manager.

Comments

(Required disk space: 97,615 KB)

5.4 DATABASE, SERVER, AND CONNECTIVITY SOFTWARE

Hewlett-Packard offers extensive database, server and connectivity software under the TAC-4 contract. Software products include Informix's standard relational database management system (RDBMS) software, database server software, and application development tools. Where applicable, a development and run-time version is available for each product.

NOTE:
The Informix software products (CLINs 0370AA through 0371AB) are covered by an HP upgrade program for the life of the contract. As updated products become available, Informix will release them to HP, and HP will notify the COTR of their availability.

Upgrade availability will also be listed on the TAC-4 home page (http://www.hp.com/go/tac4). To take advantage of these software upgrades, call the TAC-4 Help Desk (1-800-203-8224) for instructions.

OnLine Dynamic Server: Single-User Development License — CLIN 0370AA

This CLIN, the Informix OnLine Dynamic Server™ (7.x) is a powerful, multithreaded database server designed to exploit the capabilities of both symmetric multiprocessor and uniprocessor architectures to deliver breakthrough database scalability, manageability, and performance. It provides transaction processing, optimal decision support through new parallel data query technology, high availability, data integrity, mainframe caliber administration, graphical monitoring tools and multimedia capabilities within a single, client/server-ready package. It also supports a large number of SQL-based application development tools in standalone or networked environments.

OnLine Dynamic Server: Single-User Runtime License — CLIN 0370AB

This CLIN is Informix's OnLine Dynamic Server™ (7.x) Single-User Runtime license.

SE: Single-User Development License — CLIN 0370AC

This CLIN, Informix's SE (7.x), is an SQL-based database engine for small to medium range applications. It provides the power of SQL without complex database administration requirements.

SE: Single-User Runtime License — CLIN 0370AD

This CLIN is Informix's SE (7.x) Single-User Runtime license.

C ISAM: Single-User Development License — CLIN 0370AE

This CLIN, Informix's C-ISAM (7.x), is a library of C functions that efficiently manages indexed sequential access method files. It allows direct access to records from applications.

C ISAM: Single-User Runtime License — CLIN 0370AF

This CLIN is Informix's C-ISAM (7.x) Single-User Runtime license.

OnLine DSA/Optical: Single-User Development License — CLIN 0370AG

This CLIN, Informix's OnLine DSA/Optical, leverages Informix's existing database server technology while integrating the mass storage capabilities of optical disk subsystems.

OnLine DSA/Optical: Single-User Runtime License — CLIN 0370AH

This CLIN is Informix's OnLine DSA/Optical Single-User Runtime license.

4GL Compiler: Single-User Development License — CLIN 0370AJ

This CLIN, Informix's 4GL Compiler, provides high performance application execution in the production environment. It is part of a comprehensive fourth-generation application development and production environment that provides power and flexibility without the need for third-generation languages like C or COBOL.

4GL Compiler: Single-User Runtime License — CLIN 0370AK

This CLIN is Informix's 4GL Compiler Single-User Runtime license.

4GL Rapid Development System: Single-User Development License — CLIN 0370AL

This CLIN, Informix's 4GL Rapid Development System (6.x), increases developer productivity by decreasing compilation time. Written code is compiled into pseudo-code (p-code), read into memory, and executed by a p-code runner.

4GL Rapid Development System: Single-User Runtime License — CLIN 0370AM

This CLIN is Informix's 4GL Rapid Development System (6.x) Single-User Runtime license.

4GL Interactive Debugger: Single-User Development License — CLIN 0370AN

This CLIN, Informix's 4GL Interactive Debugger (6.x), allows the developer to "step inside" a running Informix 4GL program to perform powerful debugging operations in a friendly, easy-to-use environment. A "hot key" allows for switching back and forth between the running application and its source code. The debugger allows developers to trace a function, trace the changing value of a variable, view and change variables, and set break points.

ESQL/COBOL: Single-User Development License — CLIN 0370AP

This CLIN, Informix's ESQL/COBOL (7.x), is a familiar third-generation language (3GL) for developing applications, gaining the advantage of using SQL to access data from those applications.

ESQL/C: Single-User Development License — CLIN 0370AQ

This CLIN, Informix's ESQL/C (7.x), is a familiar third-generation language (3GL) for developing applications, gaining the advantage of using SQL to access data from those applications.

ESQL/Embedded Languages: Single-User Runtime License — CLIN 0370AR

This CLIN, Informix's ESQL/Embedded Language (7.x), offers the runtime capability provided in conjunction with the ESQL/COBOL and ESQL/C development products. The runtime version offers the ability to deploy applications developed with a third-generation language (3GL), gaining the advantage of using SQL to access data from those applications.

ISQL: Single-User Development License — CLIN 0370AS

This CLIN, Informix's SQL (6.x), features five built-in tools that provide the speed, power, and security required in both large and small database applications. These tools, including a forms package, report writer, interactive SQL editor, menu builder, and an interactive schema editor, are fully integrated, allowing development of complete database applications with a single product.

ISQL: Single-User Runtime License — CLIN 0370AT

This CLIN is Informix's ISQL (6.x) Single-User Runtime license.

NewEra: Single-User Development License — CLIN 0370AU

This CLIN, Informix's New Era (1.x) for OSF Motif™, is an open, graphical, object-oriented development environment designed explicitly for creating business-critical, enterprise-wide client/server database applications. It's architecture offers a set of next-generation features that include a powerful and flexible database application language; a framework for code/component reuse; the ability to create distributed, partitioned applications; and access to a complete suite of productive visual programming — all within a client/server-ready package that supports open connectivity to non-Informix relational databases.

NewEra Application Server: Single-User Development License — CLIN 0370AV

This CLIN, Informix's NewEra Application Server (1.x) for OSF Motif™, gives NewEra application developers the ability to create distributed, partitioned applications. This provides the capability of "splitting" an application, for example, allowing the user interface to reside on the client machine and the business logic to be placed on the server.

NewEra Base Deployment Class Libraries — CLIN 0370AW

This CLIN, Informix's NewEra Base Deployment Class Libraries (1.x), provides the runtime facility for the NewEra product.

NewEra Viewpoint Pro: Single-User Development License — CLIN 0370AX

This CLIN, Informix's NewEra Viewpoint Pro (2.x) for OSF Motif™, is a graphical database access tool that empowers end users to access, retrieve, modify and present data stored in a variety of heterogeneous corporate or departmental databases. It provides an easy-to-use, graphical user interface (GUI) that hides SQL and the complexities of a relational database.

NewEra Viewpoint: Single-User Development License — CLIN 0370AY

This CLIN, Informix's NewEra Viewpoint Pro (2.x) for OSF Motif™, is a graphical database access tool that empowers end users to access, retrieve, modify and present data stored in a variety of heterogeneous corporate or departmental databases. It provides an easy-to-use, graphical user interface (GUI) that hides SQL and the complexities of a relational database. As a result, end users can create and run their own customized forms, queries, and reports without having to understand SQL or the underlying database scheme.

Gateway for EDA/SQL: 1–20 User License — CLIN 0371AA

This CLIN, Informix's Enterprise Gateway (7.x), allows tools and applications running on UNIX and Microsoft Windows™ to access data located anywhere in the enterprise. It does so by incorporating the Enterprise Data Access SQL (EDA/SQL) suite of products from Information Builders Inc., which provide both SQL and remote procedure calls access to over 60 relational and non-relational data sources on 35 different hardware platforms and operating systems.

Gateway for EDA/SQL: 20+ User License — CLIN 0371AB

This CLIN, Informix's Enterprise Gateway (7.x), allows tools and applications running on UNIX and Microsoft Windows™ to access data located anywhere in the enterprise. It does so by incorporating the Enterprise Data Access SQL (EDA/SQL) suite of products from Information Builders Inc., which provide both SQL and remote procedure calls access to over 60 relational and non-relational data sources on 35 different hardware platforms and operating systems.

5.5 DOS WINDOWING SOFTWARE PRODUCTS

Hewlett-Packard offers the following DOS Windowing and Networking products software on the TAC-4 contract.

DOS Windowing Environment Single-User License — CLIN 0475AA

This CLIN, DOS Windowing Environment, is a DOS emulator. It is fully compatible with MS-DOS 5.1 and Microsoft Windows 3.1, and includes the network interface (CLIN 0480AA).

Comments

(Required disk space: 44,433 KB)

DOS Windowing Network Interface Single-User License — CLIN 0480AA

Included in CLIN 0475AA. *Not separately priced.*

5.6 GRAPHICAL USER INTERFACE PRODUCTS

Hewlett-Packard offers the following software products for graphical user interface (GUI) development on the TAC-4 contract.

GUI Builder for C Single-User License — CLIN 0335AA

This CLIN provides HP UIM/X, a comprehensive second generation GUI builder. It supports the OSF/MOTIF 1.2 tool kit to build full MOTIF-compliant GUIs. The integrated C interpreter provides a rapid prototyping capability. It provides automatic code generation and full support for ANSI C languages with automatic build support.

Comments

Prerequisite: *CLIN 0205AA. (Required disk space: 15,482 KB)*

GUI Builder for C++ Single-User License — CLIN 0340AA

This CLIN provides HP UIM/X, a comprehensive second generation GUI builder. It supports the OSF/MOTIF 1.2 tool kit to build full MOTIF-compliant GUIs. The integrated C ++ interpreter provides a rapid prototyping capability. It provides automatic code generation and full support for ANSI C++ with automatic build support.

Comments

Prerequisite: *CLIN 0210AA. (Required disk space: 5,124 KB)*

GUI Builder for Ada Single-User License — CLIN 0350AA

This CLIN provides HP UIM/X with Ada, a comprehensive second generation GUI builder. It supports the OSF/MOTIF 1.2 tool kit to build full MOTIF-compliant GUIs. It provides a rapid prototyping capability, full support for Ada, and automatic build support.

Comments

Prerequisite: *CLIN 0220AA.*

5.7 GRAPHICS SOFTWARE

Hewlett-Packard offers the following graphics software products on the TAC-4 contract.

Graphics Bindings — CLIN 0481AA

This CLIN provides bindings to X-Windows for unlimited distribution of user-developed application code.

Comments

Prerequisite: *CLIN 0220Ax*

X Windows Toolkit — CLIN 0483AA

This software product is included in CLIN 0205Ax.

MOTIF Developer's Toolkit - Single-User's License — CLIN 0485AA

This software product is included in CLIN 0220Ax.

MOTIF to Ada Binding - Single-User License — CLIN 0487AA

This software product is included in CLIN 0220Ax.

MOTIF to C++ Binding - Single-User License — CLIN 0487AB

This software product is included in CLIN 0205Ax.

Graphics Software Development Package Single-User's License — CLIN 0490AA

This CLIN provides all software necessary to develop PHIGS-based applications software. It is a high-level 2D and 3D PHIGS/PHGST graphics development toolkit that works with industry-standard X-Windows systems, OSF/MOTIF 1.2, PEX, Starbase, PostScript, and CGM. HP's PEX includes PowerShade, with high-performance, dual-buffering, lighting and shading for surface rendering.

Comments

Prerequisite: *CLINs 0205Ax, 0210Ax, 0215Ax, 0220Ax, or 0225Ax.*
(Required disk space: 263,421 KB)

National Imagery Transmission Format — CLIN 0510AA

This CLIN provides Connectware's Electronic Light Table (ELT) imaging software to allow users to quickly input, roam, annotate, manipulate, and output images from photographs, film, satellite images, maps, charts, and other real-world National Imagery Transmission Format (NITF) files.

Comments

(Required disk space: 2,990 KB)

This page was intentionally left blank
for double-sided reproduction.

6.0 SUPPORT SERVICES

This section describes the support services available to TAC-4 customers, including:

		PAGE
6.1	Documentation	6-2
6.2	Contractor Engineering Technical Services (CETS)	6-4
6.3	Maintenance and Repair	6-9
	6.3.1 Self-Maintenance	6-9
	6.3.2 Mail-Back/Carry-In Service	6-10
	6.3.3 On-Site Service and Repair	6-11
	6.3.4 Spare Parts	6-12
6.1	Software Support Services	6-13
6.2	Training	6-15

6.1 DOCUMENTATION

Hewlett-Packard provides extensive documentation for the hardware and software products offered on the TAC-4 contract, including both LaserROM (CD-ROM) and paper-based manuals. The terms of the contract also allow the Government to make additional paper copies of TAC-4 product documentation for its own purposes.

LaserROM

The TAC-4 LaserROM Documentation CD ships with every HP workstation offered on the TAC-4 contract. This CD-ROM includes the standard HP-UX Operating System documentation and HP's LaserROM software. LaserROM is an intuitive, easy-to-use interface that includes the following features:

- Keyword and full-text searching
- Hyperlink browsing capabilities
- Text annotation
- Custom bookmarks
- Custom bookshelves
- Integrated graphics with zoom capability
- Print capability (text and graphics)
- Online help.

To Order Additional Manuals

For additional copies of documentation, order the documentation CLIN that corresponds to the TAC-4 product CLIN. For example, to order additional copies of the X-Windows Terminal documentation, which is CLIN 0083AJ, order CLIN 8083AJ. Typically, the documentation CLIN is the same as the product CLIN, except that the first digit is an 8 instead of a 0.

Some product descriptions state that the bundled documentation is not separately priced (NSP) under the TAC-4 contract. Additional copies of the documentation for those products must be obtained using standard commercial methods. Please contact the TAC-4 Help Desk for assistance.

Online Access to Documentation

To reduce cost to the Government and facilitate information access, electronic documentation is also now available for many of the TAC-4 products. The TAC-4 Online Documentation Library allows you to view manuals online in Adobe Acrobat format, or download them in compressed PostScript format for printing, at no charge.

To register for access to the Online Documentation Library, send a letter to the TAC-4 Project Office at the address listed below, or a fax to (619) 553-6605. Requests made by e-mail or telephone will not be accepted. Your request must supply the following:

- TAC-4 Delivery Order Number
- Requestor's name and telephone number
- System Administrator's name, telephone number, and e-mail address for each computer that will access the Online Documentation Library
- System Administrator's PGP key fingerprint (optional)
- Hostname and IP address for each computer that will access the Online Documentation Library.

Send your letter requesting access to the Online Documentation Library to the following TAC-4 Project Office mailing address:

Commanding Officer
Naval Command, Control and Ocean Surveillance Center
RDT&E Division
49184 Transmitter Road, Room 7
San Diego, CA 92152-7346
Attention: TAC-4 Online Documentation

6.2 CONTRACTOR ENGINEERING TECHNICAL SERVICES

Hewlett-Packard offers a variety of Contractor Engineering Technical services (CETS) to TAC-4 customers. These CETS are in the form of labor and is intended to support the deployment of hardware and software products. CETS activity is within scope when a TAC-4 system is purchased ***and requires one or more of the following:***

- installation and maintenance
- software or firmware error resolution
- performance analysis
- on-site systems analysis and support
- on-site engineering support for analysis, design, coordination, integration, installation, testing, training and operation
- hardware, software, or firmware systems engineering support
- security software installation, integration, changes or upgrades.

A TAC-4 system is defined as an integrated, interoperable collection of orderable items which may be combined into a configuration as defined in a delivery order. A description of a CETS requirement should be prepared for Contracting Officer review and approval, in accordance with the scope guidelines listed above. If approved by the Contracting Officer, a detailed Statement of Work (SOW) should be prepared with the COTR and included in the delivery order package.

The CETS available on the TAC-4 contract are as follows:

- **On-Site Systems Analyst** provides full-time systems analysis with broad-based skills in networking, operating systems, relational database management systems, and selected applications packages. The systems analyst recommends changes and enhancements, and also develops implementation plans.
- **On-Site Field Engineering Support** provides full-time general hardware and software support to include installation and checkout, software installation and update, and day-to-day support requirements.
- **On-Site Systems Engineering Support** provides consulting services on questions and issues relating to systems/subsystems and software maintained and provided under this contract, including all changes and upgrades. The systems engineer implements changes and takes corrective action when necessary.
- **Software Specialist** provides expert consulting services for the installed operating system, utilities, programming languages, compilers, terminal, graphics, and local-area network (LAN) software.
- **Communications Specialist** provides expert consulting services for the installed communications systems and the effects of these systems on the operating system, utilities, programming languages, compilers, terminal, graphics, and LAN software.

- **Security Specialist** provides expert consulting and services for the installed security products and the effect of these security products on the operating system, utilities, programming languages, compilers, terminal, graphics, and LAN software.
- **Hardware Specialist** provides expert consulting and hardware engineering experience with the installed systems and peripheral devices, and the effects of this system hardware on the operating system, utilities, programming languages, compilers, terminal, graphics, and LAN software.
- **Network Support Technician** provides expert consulting services on questions and issues relating to the LAN hardware and software provided under the contract.
- **Transition Services, Level 1** provides high-quality, on-site implementation assistance for customers in a "small environment" who are migrating their applications from an HP-UX 9.x environment to an HP-UX 10.x environment. The service includes analysis and planning of the migration, assistance in moving code and scripts from HP-UX 9.x to HP-UX 10.x, and up to eight hours of scheduled telephone support from a *Migration Specialist*. This CLIN is ordered as a Firm Fixed Price Deliverable, not including travel, lodging, and applicable incidental expenses.
- **Transition Services, Level 2** provides high-quality, on-site implementation assistance for customers in a "medium to large environment" who are migrating their applications from an HP-UX 9.x environment to an HP-UX 10.x environment. The service includes analysis and planning of the migration, assistance in moving code and scripts from HP-UX 9.x to HP-UX 10.x, and up to eight hours of scheduled telephone support from a *Migration Specialist*. This CLIN is ordered as a Firm Fixed Price Deliverable, not including travel, lodging, and applicable incidental expenses.
- **Performance Implementation** provides HP system engineer(s) to deliver a Performance Evaluation, one day of on-site skills transfer on performance tools and performance techniques, and up to eight hours of scheduled telephone support from a *Performance Specialist* to discuss the results and direction proposed in the evaluation write-ups. This CLIN is ordered as Firm Fixed Price Deliverable, not including travel, lodging, meals, and applicable incidental expenses.
- **Operation Center Implementation** provides HP Operations Network Engineer(s) to deliver one day of analysis and planning for operational needs assessment with customers management staff; develop an operational procedure review and documentation of issues; install the SNMP platform, supporting database, and HP Open View Operations Center; setup the Node Bank, Node Groups, Applications Bank, Operator Workspace, message filtering, message suppression, and monitoring of log files; and provide up to 12 hours of scheduled telephone support from an *Operations Center Specialist* to discuss the results and direction proposed in the engagement. This CLIN is ordered as Firm Fixed Price Deliverable, not including travel, lodging, meals, and applicable incidental expenses.
- **MC/Service Guard Implementation** provides high-quality, on-site HP services to assist in the installation and implementation of a high availability solution and the development of operational procedures tailored to the customers' identified requirements. This assistance consists of providing up to one week of analysis and planning, needs assessment and requirements analysis, installation and custom configuration of MC/Service Guard with up to one commercial off-the-shelf

application, on-site monitoring and documentation, and up to eight hours of scheduled telephone support from a *High Availability Specialist* to discuss issues involving MC/Service Guard. This CLIN is ordered as Firm Fixed Price Deliverable, not including travel, lodging, meals, and applicable incidental expenses.

- **Network Node Manager Implementation** provides high-quality, on-site HP services to maximize the productivity of the customers network management staff and increase the availability of the customers entire networking environment. This assistance consists of providing up to one day of analysis and planning to conduct a Network Management Needs Assessment with the customers' network managers and operations staff to determine the most effective network node manager configuration, pre-installation planning including analysis of the HP hardware, software installation and configuration of SNMP, Open View Network Node Manager, one day on-site knowledge transfer on Network Node Manager software, and up to eight hours of scheduled telephone support from a Network Node Manager Specialist to discuss the results and direction proposed in the evaluation. This CLIN is ordered as Firm Fixed Price Deliverable, not including travel, lodging, meals, and applicable incidental expenses.

- **HP Server Jumpstart, Level 1** provides high-quality, on-site implementation assistance in the areas of HP-UX System Administration, Performance and Networking support during the implementation phase of an HP 9000 Series 800 server. This program is for customers installing low-end/mid-range servers or who have some HP server experience but would like some additional assistance. This CLIN is ordered as Firm Fixed Price Deliverable, not including travel, lodging, meals, and applicable incidental expenses.

- **HP Server Jumpstart, Level 2** provides high-quality, on-site implementation assistance in the areas of HP-UX System Administration, Performance and Networking support during the implementation phase of an HP 9000 Series 800 server. This program is for customers installing mid-range/high-end servers or who have some HP server experience but would like some additional assistance. This CLIN is ordered as Firm Fixed Price Deliverable, not including travel, lodging, meals, and applicable incidental expenses.

To Order CETS Services

The following tables list the CLINs associated with both continental US (CONUS) and outside continental US (OCONUS) CETS support. To order CETS services, call the COTR, Doug Romig, at (619) 553-4086 for the ordering procedure.

CLIN	CETS Service Type		$/hour
The following support services span a project or contracting activity, rather than being task-specific. Orders are typically funded for weeks or months of full-time, on-site support.			
0751AA	On-Site Systems Analyst Support	CONUS	$45
0751AB		CONUS, Overtime	$70
0752AA		OCONUS	$53
0752AB		OCONUS, Overtime	$70
0751AC	On-Site Field Engineering Support	CONUS	$45
0751AD		CONUS, Overtime	$70
0752AC		OCONUS	$53
0752AD		OCONUS, Overtime	$70
The following support services are typically task-specific, providing solutions to specific problems. Orders result from a Government Statement of Work (SOW), from which HP prepares an estimate of the labor hours required to perform the specified task.			
0751AE	On-Site Systems Engineering Support	CONUS	$50
0751AF		CONUS, Overtime	$70
0752AE		OCONUS	$75
0752AF		OCONUS, Overtime	$70
0753AA	Software Specialist	CONUS	$73
0754AA		OCONUS	$100
0753AB	Communications Specialist	CONUS	$72
0754AB		OCONUS	$100
0753AC	Security Specialist	CONUS	$77
0754AC		OCONUS	$100
0753AD	Hardware Specialist	CONUS	$79
0754AD		OCONUS	$100
0753AE	Network Support Technician	CONUS	$39
0753AF		CONUS, Overtime	$60
0754AE		OCONUS	$45
0754AF		OCONUS, Overtime	$60

CLIN	CETS Service Type		$
The following support services are ordered as Firm Fixed Price Deliverables, not including travel, lodging, meals, and applicable incidental expenses.			
0760AA	Transition Services, Level 1	CONUS	$15,900
0760AB	Transition Services, Level 2	CONUS	$37,100
0760AC	Performance Implementation	CONUS	$15,900
0760AD	Operation Center Implementation	CONUS	$26,500
0760AE	MC/Service Guard Implementation	CONUS	$31,800
0760AF	Network Node Manager Implementation	CONUS	$10,600
0760AG	HP Server Jumpstart, Level 1	CONUS	$26,500
0760AH	HP Server Jumpstart, Level 2	CONUS	$53,000

6.3 MAINTENANCE AND REPAIR

HP offers maintenance and repair services for systems and products available under the TAC-4 contract. These services include self-maintenance, mail-back/carry-in, and on-site parts, labor, and software support. All TAC-4 hardware comes with a contract life warranty (valid through January 19, 2001).

6.3.1 SELF-MAINTENANCE

Self-maintenance is available to the Lowest Repairable Unit (LRU) level, provided the maintenance is performed by trained personnel. Self-maintenance includes preventive maintenance procedures, where necessary, to assist in keeping equipment in excellent operational condition. Defective LRUs must be returned to Hewlett-Packard within 60 days for warranty consideration.

Diagnostic Capabilities

The TAC-4 contract also offers extensive system diagnostic capabilities. D1 diagnostics consist of various self-tests used by a system when it is powered on. D2 diagnostics run at customer discretion and provide substantially more information about devices than the D1 diagnostics. Both D1 and D2 diagnostics are shipped with all processors. In addition, each processor can run continuous monitoring diagnostics to verify normal operations while the system is running.

Operations Center

The TAC-4 Help Desk also supports an Operations Center for warranty service. The Operations Center is staffed with knowledgeable systems engineers and provides telephone assistance. The Operations Center can be reached via the following methods:

Phone:	**1-800-203-TAC4**
E-mail:	**hptac4oc@apollo.hp.com**
World-Wide Web:	**http: //www.hp.com/go/tac4**

6.3.2 MAIL-BACK/CARRY-IN SERVICE

To take advantage of mail-back/carry-in service for maintenance or repair, send or take the unit to the nearest Hewlett-Packard TAC-4 service center. For units under warranty, maintenance and repair will be performed at no charge, barring any product mishandling.

There are two service center locations, one on each coast:

SAIC Computer Systems
ATTN: TAC4 SERVICE
10770 Wateridge Circle
San Diego, CA 92121
*(**Not**e: This service center is cleared at the SECRET level.)*

SAIC AMSEC
ATTN: TAC4 SERVICE
2829 Guardian Lane
Virginia Beach, VA 23452

6.3.3 ON-SITE SERVICE AND REPAIR

For maintenance or repair on TAC 4 equipment not covered under warranty, on-site service can be ordered on a per-call basis as indicated below. CLIN 0777AA pertains to service within the continental US (CONUS) and CLIN 0777AB to service outside the continental US (OCONUS). Please call the COTR, Doug Romig, at (619) 553-4086 for the ordering procedure.

Per-Call Description (a)	CONUS (CLIN 0777AA)	OCONUS (CLIN 0777AB)
During Principal Period of Maintenance (PPM):	$50/hour	$150/hour
Minimum Charge Per Call	$100	$300
Maximum Charge Per Call	$400	$2,400
Outside PPM, Monday – Friday:	$50/hour	$150/hour
Minimum Charge Per Call	$100	$300
Maximum Charge Per Call	$400	$2,400
Outside PPM, Saturday, Sunday, or Holiday:	$50/hour	$150/hour
Minimum Charge Per Call	$100	$300
Maximum Charge Per Call	$400	$2,400

Onsite service is provided between the hours of 8:00 AM to 5:00 PM (0800 to 1700) local time at the trouble site, Monday through Friday. Federal Government holidays are excluded from the Principal Period of Maintenance (PPM). Response times for on-site hardware maintenance are as follows:

	Within PPM	*Outside PPM*
Within 50 mile radius of HP TAC-4 service center (noted above)	4 hours	8 hours
Other US locations	24 hours	24 hours
Military unique locations outside the US (***Note:*** *Service engineer will arrive at the designated point, with further transfer to the final destination provided by the Government.)*	24 hours	24 hours
All other locations outside the US	72 hours	72 hours

6.3.4 SPARE PARTS

The Spare Parts List is not available at this time. Please contact the TAC-4 Contracting Officer, David Berry, at (202) 433-7128 for more information regarding ordering spare parts.

6.4 SOFTWARE SUPPORT SERVICES

HP offers software support services for all software products purchased under the TAC-4 contract, for the entire contract lifetime. Software support is available through the following resources:

- The **TAC-4 Home Page** for software patches and fixes:

  http://www.hp.com/go/tac4

- The **TAC-4 Help Desk and Operations Center** for technical assistance:

  1-800-203-TAC4

If you are experiencing a problem with TAC-4 software, first check the TAC-4 Home Page for a link to "TAC-4 Software Errors & Patches." This link contains information on operating system and application software patches.

Second, contact the TAC-4 Help Desk and Operations Center, selecting menu option 3 for maintenance support. You can also access the TAC-4 Help Desk via the TAC-4 Home Page on the World-Wide Web, or by sending e-mail to:

hptac4oc@apollo.hp.com

The Help Desk technical resources include the TAC-4 Engineering Team, which has direct access to HP's extensive R&D organizations, and engineering support for third-party software products.

TAC3/TAC4 Transition Support

While TAC-3 and TAC-4 are distinct contracts with separate requirements, HP has committed to provide additional services under the TAC-4 contract to improve the compatibility between HP systems purchased on each contract, and to facilitate the migration to the TAC-4 contract. HP believes that this commitment beyond the TAC-4 contract requirements will provide significant benefits to the TAC user community.

There are three major elements in this plan. These are described more fully in a White Paper entitled *HP's Extended TAC-4 Support Plan*, which is available from HP's TAC-4 home page or by calling the TAC-4 Help Desk.

To summarize, the three major elements of this plan are as follows:

1. ***HP will support HP-UX 9.07 on the TAC-4 HP Model 712 and J210 systems***. This support will cover most TAC-4 add-on devices (as detailed in the White Paper), and includes the TAC-4 contract life warranty and Help Desk support services. This will allow users to buy new TAC-4 systems and operate them on the software baseline approved by major Navy programs.

   HP has provided a 2-user TAC-4 HP-UX 9.07 master operating system tape to the COTR for distribution to interested TAC-4 customers. The HP TAC-4 Help Desk (warranty support) will provide the first level of software support services for these users. Please note that TAC-4 CLIN 0200AF must also be purchased for users who need a three- to eight-user license.

2. ***HP will allow the Navy to replicate and distribute the TAC-4 Standard OS (CLIN 0200AC) to TAC-3 users for use on TAC-3 systems.*** This will allow many Navy programs to preserve their investment in TAC-3 systems as the software baseline moves to the TAC-4 operating system environment (HP-UX 10.X) over the next few years.

   The Navy Program Office at NRaD in San Diego, CA will be responsible for distribution and will provide the first level of software support to these TAC-3 system users. Please note that hardware maintenance for the TAC-3 systems is not included in this plan. Please contact Hughes Data Systems for TAC-3 equipment maintenance and warranty.

   Also note that there are limitations on the TAC-3 add-on equipment which will be supported in the TAC-4 HP-UX 10.x environment. There are also limitations on the add-on equipment from the TAC-4 contract which are supported on the TAC-3 systems. Please refer to the White Paper for complete details.

3. ***TAC-3 system users who have installed the TAC-4 Standard OS on their TAC-3 systems will be able to purchase additional software from the TAC-4 contract to operate on their TAC-3 systems.*** Please note that TAC-3 users who are operating with a 3- to 8-user HP-UX 9.07 license will have to purchase the TAC-4 CLIN 0200AF, which provides the 3- to 8-user Standard OS (HP-UX 10.x) license.

6.5 TRAINING

The Hewlett-Packard training services offered on the TAC-4 contract are currently under Government review. The intent of this repackaging is to provide training in a format that is more flexible as well as easier to use, maintain, distribute, and access, regardless of the training location. The repackaging will provide the Government with a TAC-4 Infobase that can be accessed for training TAC-4 users in the areas of system administration, operator training, maintenance, and so forth. This Infobase will provide both self-paced training and courses that can be incorporated into existing training curriculums.

For more information about the status of the TAC-4 Infobase or to order training services, please call the TAC-4 COTR, Doug Romig, at (619) 553-4086.

This page was intentionally left blank
for double-sided reproduction.

APPENDIX A
CONFIGURATION OPTIONS

This appendix identifies the hardware configuration options available for TAC-4 systems. These options are available either at the time of the initial order, or as add-ons after system installation. All hardware options include a contract lifetime warranty.

This section includes a discussion of the SCSI configuration constraints, followed by a *Configuration Options Table*, which summarizes the various options by processor.

SCSI Configuration Constraints

There is a limitation on the number and type of single-ended SCSI-2 and fast-wide differential SCSI-2 devices per system. Before adding multiple SCSI devices, determine if the processor can support them. Do not mix single-ended and fast-wide peripherals together on the same bus.

For the single-ended standard SCSI-2 bus, HP-UX supports only one of each type of removable-media disk drives (i.e., CD-ROM), and two of the same type of tape devices (i.e., 4-mm DAT or 8-mm tape drives) per workstation/server.

The configuration constraints for each standard single-ended SCSI-2 device type are as follows:

Single-Ended Standard SCSI-2 Devices	Maximum Number of Each Type of Device Allowed
Hard Disk Drives (internal and external)	7
CD-ROM Drives (internal and external)	1
4-mm DAT Drives (internal and external)	2
8-mm Tape Drives (internal and external)	2
3.5-inch/5.25-inch Floppy Disk Drives (internal and external)	1

NOTE:

1. *The length of a single-ended standard SCSI-2 bus must not exceed 6 meters (19.6 feet).*
2. *A maximum of seven internal and external SE-SCSI devices can be used.*

The configuration constraints for each fast-wide, differential SCSI-2 device are as follows:

Fast-Wide Differential SCSI-2 Devices	Maximum Number of Each Type of Device Allowed
SCSI-2 Drive (fast-wide disks only)	15
SCSI-2 Disk Arrays (addressed as a single drive)	7

NOTE: *The length of a fast-wide, differential SCSI-2 bus must not exceed 25 meters (82 feet).*

HARDWARE CONFIGURATION OPTIONS

	WORKSTATIONS				*PORTABLES*			*SERVERS*		
	Models 712/80 and 712/100	**Model J210**	**Model J210XC**	**Model C110**	**Models 743*i* and 748*i***	**VME Portable (Telos)**	**Portable Workstation (SAIC)**	**HP 501/502 Windows Application Servers**	**Model D350 Server**	**Model K220/420 Servers**
Memory:										
RAM Expansion – 8-MB	0035AB						0031AB			
RAM Expansion – 16-MB	0035AC						0031AC	0195AC		
RAM Expansion – 32-MB	0035AG	0023AB, 0025AB, 0027AB, 0029AB	0027AB	0028AC	0037AM	0037AM	0031AD	0195AD	0125AB	0130AD
RAM Expansion – 64-MB	0035AD				0037AN	0037AN				
RAM Expansion – 128-MB		0023AC, 0025AC, 0027AC, 0029AC	0027AC	0028AD					0125AC	0130AE
Monitors:										
14" Pedestal-Mount Color Monitor	0079AA	0079AA	0079AA		0079AA					
17" Pedestal-Mount Color Monitor	0080AA	0080AA	0080AA	0080AA	0080AA	0080AA				
19" Pedestal-Mount Color Monitor	0081AA	0081AA	0081AA	0081AA	0081AA	0081AA				
Console Terminal									0125AL	
External Color LCD Display						0010AD				

	WORKSTATIONS				PORTABLES			SERVERS		
	Models 712/80 and 712/100	Model J210	Model J210XC	Model C110	Models 743*i* and 748*i*	VME Portable (Telos)	Portable Workstation (SAIC)	HP 501/502 Windows Application Servers	Model D350 Server	Model K220/420 Servers
Fixed Storage – Internal:										
1-GB Fixed Hard Disk Drive – Internal (SE-SCSI)	0055AC				0055AC					
1-GB Fixed Hard Disk Drive – Internal (FW-SCSI)		0055AD	0055AD							
2-GB Fixed Hard Disk Drive – Internal (SE-SCSI)	0055AH				0055AH					
2-GB Fixed Hard Disk Drive – Internal (FW-SCSI)		0055AF	0055AF	0028AG						0130AG
2-GB Hot-Pluggable Disk Drive – With Canister (FW-SCSI)									0125AD	
4-GB Fixed Hard Disk Drive – Internal (FW-SCSI)		0055AN	0055AN	0028AH						0130AH
4-GB Removable Hard Disk Drive (SE-SCSI)						0010AG				
4-GB Removable Hard Disk Drive (FW-SCSI)						0010AH				
2.1-GB LP High-Performance Disk Module (SE-SCSI)										0060AE
2.1-GB LP High-Performance Disk Module (FW-SCSI)										0060AF
4.3-GB LP High-Performance Disk Module (SE-SCSI)										0060AG
4.3-GB LP High-Performance Disk Module (FW-SCSI)										0060AH

	WORKSTATIONS				PORTABLES			SERVERS		
	Models 712/80 and 712/100	Model J210	Model J210XC	Model C110	Models 743*i* and 748*i*	VME Portable (Telos)	Portable Workstation (SAIC)	HP 501/502 Windows Application Servers	Model D350 Server	Model K220/420 Servers
Fixed Storage – External:										
1-GB Fixed Hard Disk Drive – External (SE-SCSI)	0055AE	0055AE	0055AE	0055AE	0055AE					
2-GB Fixed Hard Disk Drive – External (SE-SCSI)	0055AG	0055AG	0055AG	0055AG	0055AG					
4-GB Fixed Hard Disk Drive – External (SE-SCSI)	0055AP	0055AP	0055AP	0055AP	0055AP					
4-GB Fixed Hard Disk Drive – External (FW-SCSI)		0055AQ	0055AQ	0055AQ						
Removable Storage – Internal:										
3.5" Floppy Disk Drive – Internal (SE-SCSI)		0047AA	0047AA		0047AA	Included				
3.5" Floppy Disk Drive – Internal (PC-Style)	0047AB			0028AE						
5.25" Floppy Disk Drive – Internal (SE-SCSI)		0047AD	0047AD							
CD-ROM Drive – Internal (SE-SCSI)	0049AA	0049AA	0049AA	0028AF	0049AA	Included				
2-GB 4-mm DAT Tape Drive – Internal (SE-SCSI)		0061AC	0061AC		0061AC					
4-GB 4-mm DDS2 DAT Tape Drive (8-GB with Compression) – Internal (SE-SCSI)		0061AH	0061AH	0028AJ		Included				0060AJ
4-GB DDS DAT Drive – Internal (SE-SCSI)		0061AJ	0061AJ	0061AJ						
5-GB 8-mm Tape Drive – Internal (SE-SCSI)		0061AE	0061AE		0061AE					

	WORKSTATIONS					PORTABLES		SERVERS		
	Models 712/80 and 712/100	Model J210	Model J210XC	Model C110	Models 743*i* and 748*i*	VME Portable (Telos)	Portable Workstation (SAIC)	HP 501/502 Windows Application Servers	Model D350 Server	Model K220/420 Servers
Removable Storage – External:										
5.25" Floppy Disk Drive – External (SE-SCSI)	0047AE	0047AE	0047AE	0047AE	0047AE					
CD-ROM Drive – External (SE-SCSI)	0049AC	0049AC	0049AC	0049AC	0049AC					
2-GB 4-mm DAT Tape Drive – External (SE-SCSI)	0061AD	0061AD	0061AD	0061AD	0061AD					
5-GB 8-mm DAT Tape Drive – External (SE-SCSI)	0061AF	0061AF	0061AF	0061AF	0061AF					
Human Interfaces:										
Keyboard KB1 – Benign	0065AB	0065AB	0065AB	0065AB	0065AB				0065AB	0065AB
Trackball TB2 – Benign (Penny & Giles)	0067AB	0067AB	0067AB	0067AB	0067AB					
Trackball TB2 – Benign (Evergreen)	0067AE	0067AE	0067AE	0067AE	0067AE					
Keyboard With Trackball						0010AK			0067AD	0067AD
Mouse And Pad	0067AD	0067AD	0067AD	0067AD	0067AD					
Second Monitor Port	0036AM									
Headset With Microphone and Audio Module (3.5-mm Plug Connector)	0077AB	0077AB	0077AB							

	WORKSTATIONS				PORTABLES			SERVERS		
	Models 712/80 and 712/100	Model J210	Model J210XC	Model C110	Models 743*i* and 748*i*	VME Portable (Telos)	Portable Workstation (SAIC)	HP 501/502 Windows Application Servers	Model D350 Server	Model K220/420 Servers
Graphics Systems:										
Single-Output 2D Graphics (G1)		0091AB	0091AB							
Multiple-Output 2D Graphics (G2)		0091AC	0091AC							
3D Graphics Subsystem (G3) – External		0091AD	0091AD							
Color Graphics Subsystem		0091AE	0091AE	0091AE						
HP Visualize-8 Subsystem		0092AB	0092AB	0092AB						
HP Visualize-24 Subsystem		0092AC	0092AC	0092AC						
HP Visualize-48 Subsystem		0092AE	0092AE	0092AE						
HP Visualize-48 Subsystem with Texture Map Memory		0092AF	0092AF	0092AF						
HP Visualize-48 Subsystem with Video Output		0092AG	0092AG	0092AG						
HP Visualize-48 Subsystem with Texture Map Memory and Video Output		0092AH	0092AH	0092AH						
2D Graphics Card										0130AJ
8-Plane Color Graphics Mezzanine Card					0037AP	0037AP				
Single-Channel Graphics – VME Card					0037AS					
Dual-Channel Graphics – VME Card					0037AT					
8-Bit VME Graphics Controller						0010AE				
24-Bit VME Graphics Controller						0010AF				

	WORKSTATIONS				PORTABLES			SERVERS		
	Models 712/80 and 712/100	Model J210	Model J210XC	Model C110	Models 743*i* and 748*i*	VME Portable (Telos)	Portable Workstation (SAIC)	HP 501/502 Windows Application Servers	Model D350 Server	Model K220/420 Servers
Communication Interfaces:										
FDDI Single-Attached Station		0551AA	0551AA	0551AA	0551AA					0130AM
FDDI Dual-Attached Station		0551AC	0551AC	0551AC	0551AC					
ATM Interface		0570AA	0570AA	0570AA	0570AA					
MIL-STD-1553B Interface – *Requires One EISA Slot*		0615AA	0615AA	0615AA	0615AA					
IEEE 488 Interface – *Requires One EISA Slot*		0615AC	0615AC	0615AC	0615AC					
SCSI Controller Module (SE-SCSI) – *Requires One EISA Slot*		0615AE	0615AE	0615AE	0615AE					
SCSI Controller Module (FW-SCSI) – *Requires One GSC Slot*		0615AF	0615AF	0615AF						
Second Serial Port (RS-232C)	0036AH									
Second Serial Port (RS-232C) and LAN AUI Port	0036AJ									
Second Serial Port (RS-232C) and X.25 Port	0036AK									
Second Monitor Port and Second LAN AUI Port	0036AL									
MIL-STD-1397 Interface Type B – VME Card					0617AA					
MIL-STD-1397 Interface Type C – VME Card					0617AB					
MIL-STD-1397 Interface Type H – VME Card					0617AC					
MIL-STD-1397 Interface Type A – VME Card					0617AD					

	WORKSTATIONS				PORTABLES			SERVERS		
	Models 712/80 and 712/100	**Model J210**	**Model J210XC**	**Model C110**	**Models 743*i* and 748*i***	**VME Portable (Telos)**	**Portable Workstation (SAIC)**	**HP 501/502 Windows Application Servers**	**Model D350 Server**	**Model K220/420 Servers**
MIL-STD-1397 Interface Type D – VME Card					0617AF					
MIL-STD-1397 Interface Type E – VME Card					0617AG	0617AG				
MIL-STD-1397 Parallel Interface – *Requires One EISA Slot*		0617AJ	0617AJ	0617AJ	0617AJ					
MIL-STD-1397 Interface Type D – *Requires One EISA Slot*		0617AK								
MIL-STD-1397 Interface Type E – *Requires One EISA Slot*		0617AL								
8-Channel Asynchronous Multiplexer (MIL-STD-188) *Requires One EISA Slot*					0619AA	0010AJ				
16-Channel Asynchronous Multiplexer (MIL-STD-188)					0619AC					
8-Port Serial Controller *Requires One EISA Slot*		0619AD	0619AD	0619AD	0619AD					
8-Port MUX Card									0125AG	
64-Port MUX Card									0125AH	
16-Port Module (RJ45)									0125AJ	
16-Port Module (DB25)									0125AK	
16-Port (RJ45) RS-232C MUX										0130AN
16-Port (DB25) RS-232C MUX										0130AP
16-Port (RJ45) RS-423 MUX										0130AQ
16-Port (DB25) RS-423 MUX										0130AR
16-Port RS-232C MUX Modem										0130AS
32-Port (RJ45) RS-232C MUX										0130AT
32-Port (DB25) RS-232C MUX										0130AU

	WORKSTATIONS					PORTABLES		SERVERS		
	Models 712/80 and 712/100	**Model J210**	**Model J210XC**	**Model C110**	**Models 743*i* and 748*i***	**VME Portable (Telos)**	**Portable Workstation (SAIC)**	**HP 501/502 Windows Application Servers**	**Model D350 Server**	**Model K220/420 Servers**
Ethernet – ThinLAN/9000 Interface										0130AL
FW-SCSI Card										0130AK
EISA 100VG-AnyLAN		0553AA	0553AA	0553AA	0553AA					
EISA X.25 Link		0554AA	0554AA	0554AA	0554AA					
PCMCIA Interface	0035AE	0023AD, 0025AD, 0027AD, 0029AD			0037AQ					
Fax Modem – Internal							0031AF			

APPENDIX B
CUSTOM CONFIGURATION WORKSHEETS

This appendix includes a set of worksheets designed to facilitate the TAC-4 system selection and configuration process. The following worksheets are available:

	PAGE
■ HP Model J210XC (CLINs 0027AH and 0027AJ)	B-3
■ HP Model J210 (CLINs 0027AA and 0027AG)	B-7
■ HP Model J210 Rack-Mounted (CLIN 0023AA)	B-11
■ HP Model C110 (CLINs 0028AA and 0028AB)	B-13
■ HP Model 712/100 (CLIN 0036AA)	B-17
■ HP Model 712/80 (CLINs 0035AA, 0035AH and 0035AJ)	B-19
■ HP Model 748*i* (CLINs 0037AH – 0037AL)	B-21
■ HP Model V743 VXIbus (CLINs 0038AA – 0038AC)	B-23

Each processor type has limitations on the number and type of SCSI devices, memory, slots, and so forth. In addition, not all memory and peripheral devices are available for all processors. The worksheets that follow are designed to help you build your own configuration quickly and accurately, based upon the currently available CLINs.

Use the worksheets to configure your system by following these basic steps:

Step 1. Select the processor or base configuration.

Step 2. Select one of the additional memory configurations, if desired.

Step 3. Select the mass storage options, up to the maximum quantity indicated for each configuration.

Step 4. Select a monitor and graphics options, if available.

Step 5. Select a keyboard and either a trackball or mouse and pad, if desired.

Step 6. Select any additional customer-installable options and software including any prerequisites that are required.

Step 7. Transfer the configuration information from Part 1 of the worksheet to the appropriate section of the *TAC-4 Purchase List*.

Step 8. Transfer the standalone items from Parts 2 and 3 of the worksheet to the appropriate section at the bottom of the *TAC-4 Purchase List*.

This page was intentionally left blank
for double-sided reproduction.

HP Model J210XC
Custom Configuration Worksheet
(CLINs 0027AH and 0027AJ)

This three-part worksheet is intended to help you define a custom configuration based on the processor identified above. ***Part 1*** *lists the factory-integrated options for this processor. To ensure an accurate configuration order, list the desired items from Part 1 of this worksheet on the* ***TAC-4 Purchase List*** *between the sections marked "Begin Configuration" and "End Configuration."* ***Part 2*** *of this worksheet identifies the customer-installable options and* ***Part 3*** *contains the optional external peripherals and add-on hardware. Please list the items in these two parts on the* ***TAC-4 Purchase List*** *between the sections marked "Begin Standalone Items" and "End Standalone Items."*

Part 1: Factory-Integrated Options

CLIN	*Description*	*Qty.*
Base Processor		**Required**
Select one		
0027AH	HP Model J210XC with 64-MB RAM	[ ]
0027AJ	HP Model J210XC with 128-MB RAM	[ ]
Memory Expansion Modules *(12 SIMM slots available)*		
0027AB	RAM Expansion – 32-MB (2 SIMMs)	[ ]
0027AC	RAM Expansion – 128-MB (2 SIMMs)	[ ]
Internal Fixed Hard Disk Drives		***Required***
Select a maximum of two (or CLIN 0055AL for No Disk)		
0055AD	1-GB Fixed Hard Disk Drive – Internal	[ ]
0055AF	2-GB Fixed Hard Disk Drive – Internal	[ ]
0055AN	4-GB Fixed Hard Disk Drive – Internal ***Note:*** *Adding this optional 4-GB Internal hard disk limits the system's normal operating temperature to 35°C.*	[ ]
0055AL	No Disk System	[ ]
Internal Removable Media Device *(2 maximum)*		
Select a maximum of one each		
0047AA	3.5-inch Floppy Disk Drive – Internal	[ ]
0049AA	CD-ROM – Internal	[ ]
Select a maximum of two each if neither a Floppy Disk Drive or CD-ROM was selected		
0061AC	2-GB 4-mm DAT Tape Drive – Internal	[ ]
0061AE	5-GB 8-mm Tape Drive – Internal	[ ]
0061AH	4-GB 4-mm DDS DAT Tape Drive – Internal	[ ]
Color Monitors		
0080AA	17-inch Pedestal Mount Color Monitor	[ ]
0081AA	19-inch Pedestal Mount Color Monitor	[ ]

Graphics Subsystems		
0091AB	Single-Output 2D Graphics Subsystem (G1)	[ ]
0091AC	Multiple-Output 2D Graphics Subsystem (G2)	[ ]
0091AD	Single-Output 3D Graphics Subsystem (G3)	[ ]
0091AE	Color Graphics Subsystem	[ ]
0092AB	VISUALIZE-8 Graphics Subsystem	[ ]
0092AC	VISUALIZE-24 Graphics Subsystem	[ ]
0092AD	VISUALIZE-8 and -24 Video Out Add-On Option ***Prerequisite:*** *CLIN 0092AB or CLIN 0092AC*	[ ]
0092AE	VISUALIZE-48 Graphics Subsystem	[ ]
0092AF	VISUALIZE-48 Graphics Subsystem with Texture Map Memory Option	[ ]
0092AG	VISUALIZE-48 Graphics Subsystem with Video Output Option	[ ]
0092AH	VISUALIZE-48 Graphics Subsystem with Texture Map Memory and Video Output Options	[ ]
Input Devices		
0065AB	Keyboard Type KB1 (Benign)	[ ]
0067AB	Trackball Type TB2 (Benign – Penny & Giles)	[ ]
0067AD	Mouse and Pad	[ ]
0067AE	Trackball Type TB2 (Benign – Evergreen)	[ ]

Part 2: Customer-Installable Options (Internal)

CLIN	*Description*	*Qty.*
Interfaces (EISA Boards)		
0551AA	FDDI Single-Attached Station	[ ]
0551AC	FDDI Dual-Attached Station	[ ]
0553AA	EISA 100VG-AnyLAN	[ ]
0554AA	EISA X.25 Link	[ ]
0570AA	ATM	[ ]
0615AA	MIL-STD-1553B Interface	[ ]
0615AC	IEEE 488 Interface	[ ]
0615AE	SCSI Controller Module (SE-SCSI)	[ ]
0617AJ	MIL-STD 1397 Parallel Interface	[ ]
0617AK	MIL-STD 1397 Type D Interface	[ ]
0617AL	MIL-STD 1397 Type E Interface	[ ]
0619AD	8-Port Serial Controller	[ ]

Part 3: External Storage Options

CLIN	*Description*	*Qty.*
0055AE	1-GB Fixed Hard Disk Drive – External (SE-SCSI)	[ ]
0055AG	2-GB Fixed Hard Disk Drive – External (SE-SCSI)	[ ]
0055AP	4-GB Fixed Hard Disk Drive – External (SE-SCSI)	[ ]
0055AQ	4-GB Fixed Hard Disk Drive – External (FW-SCSI)	[ ]
0047AE	5.25” Floppy Disk Drive – External (SE-SCSI)	[ ]
0049AC	CD-ROM Drive – External (SE-SCSI)	[ ]
0061AD	2-GB 4-mm DAT Drive – External (SE-SCSI)	[ ]
0061AF	5-GB 8-mm Tape Drive – External (SE-SCSI)	[ ]
0061AJ	4-GB 4-mm DDS DAT Drive – External (SE-SCSI)	[ ]

This page was intentionally left blank
for double-sided reproduction.

HP Model J210
Custom Configuration Worksheet
(CLINs 0027AA and 0027AG)

This three-part worksheet is intended to help you define a custom configuration based on the processor identified above. ***Part 1*** *lists the factory-integrated options for this processor. To ensure an accurate configuration order, list the desired items from Part 1 of this worksheet on the* ***TAC-4 Purchase List*** *between the sections marked "Begin Configuration" and "End Configuration."* ***Part 2*** *of this worksheet identifies the customer-installable options and* ***Part 3*** *contains the optional external peripherals and add-on hardware. Please list the items in these two parts on the* ***TAC-4 Purchase List*** *between the sections marked "Begin Standalone Items" and "End Standalone Items."*

Part 1: Factory-Integrated Options

CLIN	*Description*	*Qty.*
Base Processor		***Required***
Select one		
0027AA	HP Model J210 with 64-MB RAM	[ ]
0027AG	HP Model J210 with 128-MB RAM	[ ]
Memory Expansion Modules for CLIN 0027AA *(12 SIMM slots available)*		
and CLIN 0027AG *(14 SIMM slots available)*		
0027AB	RAM Expansion – 32-MB (2 SIMMs)	[ ]
0027AC	RAM Expansion – 128-MB (2 SIMMs)	[ ]
Internal Fixed Hard Disk Drives		***Required***
Select a maximum of two (or CLIN 0055AL for No Disk)		
0055AD	1-GB Fixed Hard Disk Drive – Internal	[ ]
0055AF	2-GB Fixed Hard Disk Drive – Internal	[ ]
0055AN	4-GB Fixed Hard Disk Drive – Internal ***Note:*** *Adding this optional 4-GB internal hard disk limits the system's normal operating temperature to 35°C.*	[ ]
0055AL	No Disk System	[ ]
Internal Removable Media Devices		
Select a maximum of one each		
0047AA	3.5-inch Floppy Disk Drive – Internal	[ ]
0049AA	CD-ROM – Internal	[ ]
Select a maximum of two each if neither a Floppy Disk Drive or CD-ROM was selected		
0061AC	2-GB 4-mm DAT Tape Drive – Internal	[ ]
0061AE	5-GB 8-mm Tape Drive – Internal	[ ]
0061AH	4-GB 4-mm DDS DAT Drive – Internal	[ ]
Color Monitors		
0080AA	17-inch Pedestal Mount Color Monitor	[ ]
0081AA	19-inch Pedestal Mount Color Monitor	[ ]

Graphics Subsystems		
0091AB	Single-Output 2D Graphics Subsystem (G1)	[ ]
0091AC	Multiple-Output 2D Graphics Subsystem (G2)	[ ]
0091AD	Single-Output 3D Graphics Subsystem (G3)	[ ]
0091AE	Color Graphics Subsystem	[ ]
0092AB	VISUALIZE-8 Graphics Subsystem	[ ]
0092AC	VISUALIZE-24 Graphics Subsystem	[ ]
0092AD	VISUALIZE-8 and -24 Video Out Add-On Option ***Prerequisite:*** *CLIN 0092AB or CLIN 0092AC*	[ ]
0092AE	VISUALIZE-48 Graphics Subsystem	[ ]
0092AF	VISUALIZE-48 Graphics Subsystem with Texture Map Memory Option	[ ]
0092AG	VISUALIZE-48 Graphics Subsystem with Video Output Option	[ ]
0092AH	VISUALIZE-48 Graphics Subsystem with Texture Map Memory and Video Output Options	[ ]
Input Devices		
0065AB	Keyboard Type KB1 (Benign)	[ ]
0067AB	Trackball Type TB2 (Benign – Penny & Giles)	[ ]
0067AD	Mouse and Pad	[ ]
0067AE	Trackball Type TB2 (Benign – Evergreen)	[ ]

Part 2: Customer-Installable Options (Internal)

CLIN	*Description*	*Qty.*
Interfaces (EISA Boards)		
0551AA	FDDI Single-Attached Station	[ ]
0551AC	FDDI Dual-Attached Station	[ ]
0553AA	EISA 100VG-Anylan	[ ]
0554AA	EISA X.25 Link	[ ]
0570AA	ATM	[ ]
0615AA	MIL-STD-1553B Interface	[ ]
0615AC	IEEE 488 Interface	[ ]
0615AE	SCSI Controller Module (SE-SCSI)	[ ]
0617AJ	MIL-STD-1397 Parallel Interface	[ ]
0617AK	MIL-STD-1397 Type D Interface	[ ]
0617AL	MIL-STD-1397 Type E Interface	[ ]
0619AD	8-Port Serial Controller	[ ]

Part 3: External Storage Options

CLIN	*Description*	*Qty.*
0055AE	1-GB Fixed Hard Disk Drive – External (SE-SCSI)	[ ]
0055AG	2-GB Fixed Hard Disk Drive – External (SE-SCSI)	[ ]
0055AP	4-GB Fixed Hard Disk Drive – External (SE-SCSI)	[ ]
0055AQ	4-GB Fixed Hard Disk Drive – External (FW-SCSI)	[ ]
0047AE	5.25” Floppy Disk Drive – External (SE-SCSI)	[ ]
0049AC	CD-ROM Drive – External (SE-SCSI)	[ ]
0061AD	2-GB 4-mm DAT Drive – External (SE-SCSI)	[ ]
0061AF	5-GB 8-mm Tape Drive – External (SE-SCSI)	[ ]
0061AJ	4-GB 4-mm DDS DAT Drive - External (SE-SCSI)	[ ]

This page was intentionally left blank
for double-sided reproduction.

HP Model J210 (Rack-Mounted) Custom Configuration Worksheet

(CLIN 0023AA)

This three-part worksheet is intended to help you define a custom configuration based on the processor identified above. ***Part 1*** *lists the factory-integrated options for this processor. To ensure an accurate configuration order, list the desired items from Part 1 of this worksheet on the* ***TAC-4 Purchase List*** *between the sections marked "Begin Configuration" and "End Configuration."* ***Part 2*** *of this worksheet identifies the customer-installable options and* ***Part 3*** *contains the optional external peripherals and add-on hardware. Please list the items in these two parts on the* ***TAC-4 Purchase List*** *between the sections marked "Begin Standalone Items" and "End Standalone Items."*

Part 1: Factory-Integrated Options

CLIN	*Description*	*Qty.*
Base Processor		***Required***
0023AA	HP Model J210 *(Rack-Mounted)* with 64-MB RAM	[**1**]
Memory Expansion Modules *(12 SIMM slots available)*		
0023AB	RAM Expansion – 32-MB (2 SIMMs)	[ ]
0023AC	RAM Expansion – 128-MB (2 SIMMs)	[ ]
Internal Fixed Hard Disk Drives		***Required***
Select a maximum of two (or CLIN 0055AL for No Disk)		
0055AD	1-GB Fixed Hard Disk Drive – Internal	[ ]
0055AF	2-GB Fixed Hard Disk Drive – Internal	[ ]
0055AL	No Disk System	[ ]
Internal Removable Media Device *(Two maximum)*		
Select a maximum of one each		
0047AA	3.5-inch Floppy Disk Drive – Internal	[ ]
0049AA	CD-ROM – Internal	[ ]
Select a maximum of two each if neither a Floppy Disk Drive or CD-ROM was selected		
0061AC	2-GB 4-mm DAT Drive – Internal	[ ]
0061AE	5-GB 8-mm Tape Drive – Internal	[ ]
0061AH	4-GB 4-mm DDS DAT Drive – Internal	[ ]

Graphics Subsystems		
0091AB	Single-Output 2D Graphics Subsystem (G1)	[ ]
0091AC	Multiple-Output 2D Graphics Subsystem (G2)	[ ]
0091AE	Color Graphics Subsystem	[ ]
0092AB	VISUALIZE-8 Graphics Subsystem	[ ]
0092AC	VISUALIZE-24 Graphics Subsystem	[ ]
0092AE	VISUALIZE-48 Graphics Subsystem	[ ]
0092AF	VISUALIZE-48 Graphics Subsystem with Texture Map Memory Option	[ ]
0092AG	VISUALIZE-48 Graphics Subsystem with Video Output Option	[ ]
0092AH	VISUALIZE-48 Graphics Subsystem with Texture Map Memory and Video Output Options	[ ]

Part 2: Customer-Installable Options (Internal)

CLIN	*Description*	*Qty.*
Interfaces (EISA Boards)		
0615AA	MIL-STD-1553B Interface	[ ]
0615AC	IEEE 488 Interface	[ ]
0617AJ	MIL-STD-1397 Parallel Interface	[ ]
0617AK	MIL-STD-1397 Type D Interface	[ ]
0617AL	MIL-STD-1397 Type E Interface	[ ]
0619AD	8-Port Serial Controller	[ ]

Part 3: External Storage Options

None

HP Model C110
Custom Configuration Worksheet
(CLINs 0028AA and 0028AB)

This three-part worksheet is intended to help you define a custom configuration based on the processor identified above. ***Part 1*** *lists the factory-integrated options for this processor. To ensure an accurate configuration order, list the desired items from Part 1 of this worksheet on the* ***TAC-4 Purchase List*** *between the sections marked "Begin Configuration" and "End Configuration."* ***Part 2*** *of this worksheet identifies the customer-installable options and* ***Part 3*** *contains the optional external peripherals and add-on hardware. Please list the items in these two parts on the* ***TAC-4 Purchase List*** *between the sections marked "Begin Standalone Items" and "End Standalone Items."*

Part 1: Factory-Integrated Options

CLIN	*Description*	*Qty.*
Base Configuration		***Required***
Select one		
0028AA	HP Model C110 Workstation with 32-MB RAM	[ ]
0028AB	HP Model C110 workstation with 128-MB RAM	[ ]
Memory Expansion Modules for CLINs 0028AA or 0028AB *(6 SIMM slots available)*		
0028AC	RAM Expansion – 32-MB (2 SIMMs)	[ ]
0028AD	RAM Expansion – 128-MB (2 SIMMs)	[ ]
Internal Fixed Hard Disk Drives		***Required***
Select a maximum of two (or CLIN 0055AL for No Disk)		
0028AG	2-GB Fixed Hard Disk Drive – Internal	[ ]
0028AH	4-GB Fixed Hard Disk Drive – Internal	[ ]
	Note: *Adding this optional 4-GB internal hard disk limits the system's normal operating temperature to 35°C.*	
	Note: *Only one 4-GB fixed hard disk (CLIN 0028AH) can be installed. If CLINs 0028AG and 0028AH are both ordered, a 3.5-inch floppy disk drive (CLIN 0028AE) can not be installed.*	
0055AL	No Disk System	[ ]
Internal Removable Media Devices		
Select a maximum of one		
0028AE	3.5-inch Floppy Disk Drive – Internal	[ ]
	Note: *Not available if both CLINs 0028AG and 0028AH are ordered.*	
0028AF	CD-ROM – Internal	[ ]
0028AJ	4-GB 4-mm DDS DAT Drive – Internal	[ ]
Color Monitors		
0080AA	17-inch Pedestal Mount Color Monitor	[ ]
0081AA	19-inch Pedestal Mount Color Monitor	[ ]

Graphics Subsystems		
0091AE	Color Graphics Subsystem	[ ]
0092AB	VISUALIZE-8 Graphics Subsystem	[ ]
0092AC	VISUALIZE-24 Graphics Subsystem	[ ]
0092AD	VISUALIZE-8 and -24 Video Out Add-On Option ***Prerequisite:*** *CLIN 0092AB or CLIN 0092AC*	[ ]
0092AE	VISUALIZE-48 Graphics Subsystem	[ ]
0092AF	VISUALIZE-48 Graphics Subsystem with Texture Map Memory Option	[ ]
0092AG	VISUALIZE-48 Graphics Subsystem with Video Output Option	[ ]
0092AH	VISUALIZE-48 Graphics Subsystem with Texture Map Memory and Video Output Options	[ ]
Input Devices		
0065AB	Keyboard Type KB1 (Benign)	[ ]
0067AB	Trackball Type TB2 (Benign – Penny & Giles)	[ ]
0067AD	Mouse and Pad	[ ]
0067AE	Trackball Type TB2 (Benign – Evergreen)	[ ]

Part 2: Customer-Installable Options (Internal)

CLIN	*Description*	*Qty.*
Interfaces (EISA Slots)		
0551AA	FDDI Single-Attached Station	[ ]
0551AC	FDDI Dual-Attached Station	[ ]
0553AA	EISA 100VG-AnyLAN	[ ]
0554AA	EISA X.25 Link	[ ]
0570AA	ATM	[ ]
0615AA	MIL-STD-1553B Interface	[ ]
0615AC	IEEE 488 Interface	[ ]
0615AE	SCSI Controller Module (SE-SCSI)	[ ]
0617AJ	MIL-STD 1397 Parallel Interface	[ ]
0617AK	MIL-STD 1397 Type D Interface	[ ]
0617AL	MIL-STD 1397 Type E Interface	[ ]
0619AD	8-Port Serial Controller	[ ]

Part 3: External Storage Options

CLIN	*Description*	*Qty.*
0055AE	1-GB Fixed Hard Disk Drive – External (SE-SCSI)	[ ]
0055AG	2-GB Fixed Hard Disk Drive – External (SE-SCSI)	[ ]
0055AP	4-GB Fixed Hard Disk Drive – External (SE-SCSI)	[ ]
0055AQ	4-GB Fixed Hard Disk Drive – External (FW-SCSI)	[ ]
0047AE	5.25-inch Floppy Disk Drive – External (SE-SCSI)	[ ]
0049AC	CD-ROM – External (SE-SCSI)	[ ]
0061AD	2-GB 4-mm DAT Drive – External (SE-SCSI)	[ ]
0061AF	5-GB 8-mm Tape Drive – External (SE-SCSI)	[ ]
0061AJ	4-GB 4-mm DDS DAT Drive – External (SE-SCSI)	[ ]

This page was intentionally left blank
for double-sided reproduction.

HP Model 712/100
Custom Configuration Worksheet

(CLIN 0036AA)

This three-part worksheet is intended to help you define a custom configuration based on the processor identified above. ***Part 1*** *lists the factory-integrated options for this processor. To ensure an accurate configuration order, list the desired items from Part 1 of this worksheet on the* ***TAC-4 Purchase List*** *between the sections marked "Begin Configuration" and "End Configuration."* ***Part 2*** *of this worksheet identifies the customer-installable options and* ***Part 3*** *contains the optional external peripherals and add-on hardware. Please list the items in these two parts on the* ***TAC-4 Purchase List*** *between the sections marked "Begin Standalone Items" and "End Standalone Items."*

Part 1: Factory-Integrated Options

CLIN	*Description*	*Qty.*
Base Configuration		***Required***
0036AA	HP Model 712/100 *with no RAM*	[**1**]
Memory Expansion Modules for CLIN 0036AA *(6 SIMM slots available)*		
0035AB	RAM Expansion – 8-MB (2 SIMMs)	[ ]
0035AC	RAM Expansion – 16-MB (2 SIMMs)	[ ]
0035AD	RAM Expansion – 64-MB (2 SIMMs)	[ ]
Internal Fixed Hard Disk Drive		
Select a maximum of one (or CLIN 0055AL for No Disk)		
0055AC	1-GB Fixed Hard Disk Drive – Internal	[ ]
0055AH	2-GB Fixed Hard Disk Drive – Internal	[ ]
0055AL	No Disk System	[ ]
Internal Removable Media Device		
Select a maximum of one		
0047AA	3.5-inch Floppy Disk Drive – Internal	[ ]
I/O Interfaces		
Select a maximum of one		
0036AH	Second Serial Port (RS-232-C)	[ ]
0036AJ	Second Serial Port (RS-232-C) and LAN AUI Port	[ ]
0036AK	Second Serial Port (RS-232-C) and X.25 Port	[ ]
0036AK	Second Serial Port (RS-232-C) and X.25 Port	[ ]
0036AL	Second Monitor Port and Second LAN AUI Port	[ ]
0036AM	Second Monitor Port (for 2 Monitors Total)	[ ]
Color Monitors		
0080AA	17-inch Pedestal Mount Color Monitor	[ ]
0081AA	19-inch Pedestal Mount Color Monitor	[ ]

Input Devices

0065AB	Keyboard Type KB1 (Benign)	[ ]
0067AB	Trackball Type TB2 (Benign – Penny & Giles)	[ ]
0067AD	Mouse and Pad	[ ]
0067AE	Trackball Type TB2 (Benign – Evergreen)	[ ]

Part 2: Customer-Installable Options (Internal)

All of the internal options available for the HP 712 are factory integrated.

Part 3: External Storage Options

CLIN	*Description*	*Qty.*
0055AE	1-GB Fixed Hard Disk Drive – External (SE-SCSI)	[ ]
0055AG	2-GB Fixed Hard Disk Drive – External (SE-SCSI)	[ ]
0055AP	4-GB Fixed Hard Disk Drive – External (SE-SCSI)	[ ]
0047AE	5.25” Floppy Disk Drive – External (SE-SCSI)	[ ]
0049AC	CD-ROM Drive – External (SE-SCSI)	[ ]
0061AD	2-GB 4-mm DAT Drive – External (SE-SCSI)	[ ]
0061AF	5-GB 8-mm Tape Drive – External (SE-SCSI)	[ ]
0061AJ	4-GB 4-mm DDS DAT Drive – External (SE-SCSI)	[ ]

HP Model 712/80
Custom Configuration Worksheet
(CLINs 0035AA, 0035AH, and 0035AJ)

This three-part worksheet is intended to help you define a custom configuration based on the processor identified above. ***Part 1*** *lists the factory-integrated options for this processor. To ensure an accurate configuration order, list the desired items from Part 1 of this worksheet on the* ***TAC-4 Purchase List*** *between the sections marked "Begin Configuration" and "End Configuration."* ***Part 2*** *of this worksheet identifies the customer-installable options and* ***Part 3*** *contains the optional external peripherals and add-on hardware. Please list the items in these two parts on the* ***TAC-4 Purchase List*** *between the sections marked "Begin Standalone Items" and "End Standalone Items."*

Part 1: Factory-Integrated Options

CLIN	*Description*	*Qty.*
Base Configuration		***Required***
Select a maximum of one		
0035AA	HP Model 712/80 with 16-MB RAM	[ ]
0035AH	HP Model 712/80 with 32-MB RAM	[ ]
0035AJ	HP Model 712/80 with 64-MB RAM	[ ]
Memory Expansion Modules for CLINs 0035AA, 0035AH and 0035AJ ***(2 SIMM slots available)***		
0035AB	RAM Expansion – 8-MB (2 SIMMs)	[ ]
0035AC	RAM Expansion – 16-MB (2 SIMMs)	[ ]
0035AD	RAM Expansion – 64-MB (2 SIMMs)	[ ]
Internal Fixed Hard Disk Drives		
Select a maximum of one (or CLIN 0055AL for No Disk)		
0055AC	1-GB Fixed Hard Disk Drive – Internal	[ ]
0055AH	2-GB Fixed Hard Disk Drive – Internal	[ ]
0055AL	No Disk System	[ ]
Internal Removable Media Device (Select a maximum of 1)		
0047AA	3.5-inch Floppy Disk Drive – Internal	[ ]
I/O Interfaces		
Select a maximum of one		
0036AH	Second Serial Port (RS-232-C)	[ ]
0036AJ	Second Serial Port (RS-232-C) and LAN AUI Port	[ ]
0036AK	Second Serial Port (RS-232-C) and X.25 Port	[ ]
0036AL	Second Monitor Port And Second LAN AUI Port	[ ]
0036AM	Second Monitor Port (for Two Monitors Total)	[ ]
Color Monitors		
0079AA	14-inch Pedestal Mount Color Monitor	[ ]
0080AA	17-inch Pedestal Mount Color Monitor	[ ]
0081AA	19-inch Pedestal Mount Color Monitor	[ ]

Input Devices

0065AB	Keyboard Type KB1 (Benign)	[ ]
0067AB	Trackball Type TB2 (Benign – Penny & Giles)	[ ]
0067AD	Mouse and Pad	[ ]
0067AE	Trackball Type TB2 (Benign – Evergreen)	[ ]

Part 2: Customer-Installable Options (Internal)

All of the internal options available for the HP 712 are factory integrated.

Part 3: External Storage Options

CLIN	*Description*	*Qty.*
0055AE	1-GB Fixed Hard Disk Drive – External (SE-SCSI)	[ ]
0055AG	2-GB Fixed Hard Disk Drive – External (SE-SCSI)	[ ]
0055AP	4-GB Fixed Hard Disk Drive – External (SE-SCSI)	[ ]
0047AE	5.25” Floppy Disk Drive – External (SE-SCSI)	[ ]
0049AC	CD-ROM Drive – External (SE-SCSI)	[ ]
0061AD	2-GB 4-mm DAT Drive – External (SE-SCSI)	[ ]
0061AF	5-GB 8-mm Tape Drive – External (SE-SCSI)	[ ]
0061AJ	4-GB 4-mm DDS DAT Drive – External (SE-SCSI)	[ ]

HP Model 748*i*
Custom Configuration Worksheet
(CLINs 0037AH – 0037AL)

This three-part worksheet is intended to help you define a custom configuration based on the processor identified above. ***Part 1*** *lists the factory-integrated options for this processor. To ensure an accurate configuration order, list the desired items from Part 1 of this worksheet on the* ***TAC-4 Purchase List*** *between the sections marked "Begin Configuration" and "End Configuration."* ***Part 2*** *of this worksheet identifies the customer-installable options and* ***Part 3*** *contains the optional external peripherals and add-on hardware. Please list the items in these two parts on the* ***TAC-4 Purchase List*** *between the sections marked "Begin Standalone Items" and "End Standalone Items."*

Part 1: Factory-Integrated Options

CLIN	*Description*	*Qty.*
Base Processor		***Required***
Select one		
(NOTE: each of these CLINs includes 64-MB RAM and a 1-GB Hard Disk Drive in Bay 4)		
0037AH	HP Model 748*i* /64 Integrated System (with On-Board 8-plane Graphics)	[ ]
0037AJ	HP Model 748*i* /64 Integrated System	[ ]
0037AK	HP Model 748*i* /100 Integrated System (with On-Board 8-plane Graphics)	[ ]
0037AL	HP Model 748*i* /100 Integrated System	[ ]
Memory Expansion Modules for CLINs 0037AH – 0037AL ***(3 RAM cards available)***		
0037AM	RAM Expansion – 32-MB (1 RAM card)	[ ]
0037AN	RAM Expansion – 64-MB (1 RAM card)	[ ]
Additional Mass Storage Devices For Bay 1 ***(refer to Appendix A for SCSI Constraints)***		
Select one		
0055AC	1-GB Fixed Hard Disk Drive – Internal	[ ]
0055AH	2-GB Fixed Hard Disk Drive – Internal	[ ]
0061AC	2-GB 4-mm DAT Drive – Internal	[ ]
0049AA	CD-ROM – Internal	[ ]
Additional Mass Storage Devices for Bay 2 ***(refer to Appendix A for SCSI Constraints)***		
Select one		
0047AA	3.5-inch Floppy Disk Drive – Internal	[ ]
0055AC	1-GB Fixed Hard Disk Drive – Internal	[ ]
0055AH	2-GB Fixed Hard Disk Drive – Internal	[ ]
0061AC	2-GB 4-mm DAT Drive – Internal	[ ]
0049AA	CD-ROM – Internal	[ ]
Additional Mass Storage Devices For Bay 3 ***(refer to Appendix A for SCSI Constraints)***		
Select one		
0047AA	3.5-inch Floppy Disk Drive – Internal	[ ]
0055AC	1-GB Fixed Hard Disk Drive – Internal	[ ]
0055AH	2-GB Fixed Hard Disk Drive – Internal	[ ]
0061AC	2-GB 4-mm DAT Drive – Internal	[ ]
0049AA	CD-ROM – Internal	[ ]

Color Monitors		
0079AA	14-inch Pedestal Mount Color Monitor	[ ]
0080AA	17-inch Pedestal Mount Color Monitor	[ ]
0081AA	19-inch Pedestal Mount Color Monitor	[ ]
Graphics Card		
0037AP	8-Plane Color Graphics Mezzanine Card	[ ]
Input Devices		
0065AB	Keyboard Type KB1 (Benign)	[ ]
0067AB	Trackball Type TB2 (Benign – Penny & Giles)	[ ]
0067AD	Mouse and Pad	[ ]
0067AE	Trackball Type TB2 (Benign – Evergreen)	[ ]

Part 2: Customer-Installable Options (Internal)

CLIN	*Description*	*Qty.*
VME Cards		
0037AS	Single-Channel Graphics VME Card	[ ]
0037AT	Dual-Channel Graphics VME Card	[ ]
0617AA	MIL-STD-1397 Interface Type B (Requires One VME Slot)	[ ]
0617AB	MIL-STD-1397 Interface Type C (Requires One VME Slot)	[ ]
0617AC	MIL-STD-1397 Interface Type H (Requires One VME Slot)	[ ]
0617AD	MIL-STD-1397 Interface Type A (Requires One VME Slot)	[ ]
0617AF	MIL-STD-1397 Interface Type D (Requires One VME Slot)	[ ]
0617AG	MIL-STD-1397 Interface Type E (Requires One VME Slot)	[ ]

Part 3: External Storage Options

CLIN	*Description*	*Qty.*
0055AE	1-GB Fixed Hard Disk Drive – External (SE-SCSI)	[ ]
0055AG	2-GB Fixed Hard Disk Drive – External (SE-SCSI)	[ ]
0055AP	4-GB Fixed Hard Disk Drive – External (SE-SCSI)	[ ]
0047AE	5.25” Floppy Disk Drive – External (SE-SCSI)	[ ]
0049AC	CD-ROM Drive – External (SE-SCSI)	[ ]
0061AD	2-GB 4-mm DAT Drive – External (SE-SCSI)	[ ]
0061AF	5-GB 8-mm Tape Drive – External (SE-SCSI)	[ ]
0061AJ	4-GB 4-mm DDS DAT Drive – External (SE-SCSI)	[ ]

HP Model V743
Custom Configuration Worksheet
(CLINs 0038AA – 0038AD)

This three-part worksheet is intended to help you define a custom configuration based on the processor identified above. ***Part 2*** *of this worksheet identifies the customer-installable options for this processor. Please list the desired items on the* ***TAC-4 Purchase List*** *between the sections marked "Begin Standalone Items" and "End Standalone Items."*

Part 1: Factory-Integrated Options

None

Part 2: Customer-Installable Options (Internal)

CLIN	*Description*	*Qty.*
13-Slot Mainframe		***Required***
0038AD	HP 13-Slot C-Size High-Power VXI Mainframe	[**1**]
V743 Processor		
Select one		
0038AA	HP V743/100 VXI Embedded Controller Module with 32-MB RAM	[ ]
0038AB	HP V743/100 VXI Embedded Controller Module with 64-MB RAM	[ ]
0038AC	HP V743/100 VXI Embedded Controller Module with 128-MB RAM	[ ]
Memory Expansion Modules for CLINs 0038AA, 0038AB and 0038AC (2 SIMM slots available)		
0035AG	RAM Expansion – 32-MB (2 SIMMs)	[ ]
0035AD	RAM Expansion – 64-MB (2 SIMMs)	[ ]
Internal Mass Storage Modules		
0038AG	VXI SCSI Disk Module – Includes 1-GB Hard Disk Drive and 21-MB Floptical Drive	[ ]
0038AH	VXI Data Disk/DAT/SCSI-2 Module – Includes 2.1-GB Hard Disk Drive and 4-GB 4-mm DDS DAT Drive	[ ]
0038AJ	VXI Data Disk/SCSI-2 Module – Includes Two 2.1-GB Hard Disk Drives	[ ]
0038AL	VXI System Disk (2.1-GB) with DAT Drive – Includes 2.1-GB Hard Drive and 4-GB 4-mm DAT Drive	[ ]
Additional Modules		
0038AE	VXI Analog-to Digital Converter Module	[ ]
0038AF	VXI 25.6 kHz 8-Channel Digitizer Module	[ ]
0038AK	VXI Digital Signal Processor Module with 16-MB RAM	[ ]
Color Monitors		
0080AA	17-inch Pedestal Mount Color Monitor	[ ]
0081AA	19-inch Pedestal Mount Color Monitor	[ ]

Input Devices

0065AB	Keyboard Type KB1 (Benign)	[ ]
0067AB	Trackball Type TB2 (Benign – Penny & Giles)	[ ]
0067AD	Mouse and Pad	[ ]
0067AE	Trackball Type TB2 (Benign – Evergreen)	[ ]

Part 3: External Storage Options

None

APPENDIX C
ORDER FORMS

This appendix includes reproducible copies of the order forms required for placing TAC-4 orders. Please refer to Section 2, *Configuration and Ordering Information*, for more detailed instructions.

Copies of these order forms are included on the following pages:

- TAC-4 Worksheet ..... *Worksheet Requested by COTR*
- TAC-4 Purchase List ..... *Configuration and Delivery Order Summary*
- NAVCOMPT Form 2276 ..... *Request for Contractual Procurement*
- NAVCOMPT Form 2275 ..... *Order for Work and Services*
- DD Form 448 ..... *Military Interdepartmental Purchase Request (MIPR)*
- DD Form 448-2 ..... *Acceptance of MIPR*
- DD Form 1155 ..... *Order for Supplies or Services*

This page was intentionally left blank
for double-sided reproduction.

TAC-4 WORKSHEET

1. Technical Point of Contact (POC):

NAME: _____ PHONE: _____

E-mail Address: _____ FAX: _____

(commercial number only)

2. Financial Point of Contact (POC):

NAME: _____ PHONE: _____

E-mail Address: _____ FAX: _____

(commercial number only)

3. Shipping Address *(NO P.O. BOX Numbers)*:

COMPANY: _____ POC: _____

ADDRESS: _____ CODE: _____

_____ PHONE: _____

FAX: _____

UIC or
DODAAD NUMBER: _____ *(Address code, required by government payment office)*

Note: *If shipment is to more than one location, please provide additional shipping information on a separate sheet.*

4. Additional Shipping Requirements:

If shipping to a contractor*, please provide the contract number. Verification will be performed by NISMIC.*

CONTRACTING OFFICER: _____

PHONE: _____ CONTRACT #: _____

FAX: _____ AGENCY: _____

If shipping COMSEC equipment *(CLINs 0653AA, 0653AB, 0653AC, 0655AA, 0655AB, 0655AC and 0655AD):*

COMSEC ACCOUNT #: _____ CUSTODIAN: _____

COMMAND: _____ CODE: _____

ADDRESS: _____ PHONE: _____

_____ FAX: _____

ZIP CODE: _____ UIC/DODAAD: _____

(address code)

If there are specific times or days when shipment can not be received, please indicate below:

_____

_____

_____

_____

This page was intentionally left blank
for double-sided reproduction.

TAC-4 Purchase List

Contract N68939-95-D-0004

NOTE: *You must create a separate Purchase List for each workstation configuration.*

Delivery Order Summary

COMMAND: _____

POC: _____

PHONE: _____

FAX: _____

CONFIGURATION # ____ **TOTAL:** _____

STANDALONE ITEMS TOTAL: _____

DELIVERY ORDER TOTAL: _____

CLIN	Description	Price	Quantity Each	Extended Price
Begin configuration # _____				
End configuration # _____				

CONFIGURATION # _____ TOTAL: $ _____

Begin standalone items			
End standalone items			

STANDALONE ITEMS TOTAL: $ _____

This page was intentionally left blank
for double-sided reproduction.

[This page left blank for drop in of Form #2276]

[This page left blank for drop in of back of Form #2276]

[This page left blank for drop in of Form #2275]

[This page left blank for drop in of back of Form #2275]

[This page left blank for drop in of Form DD448]

This page was intentionally left blank
for double-sided reproduction.

[This page left blank for drop in of Form DD488-2]

This page was intentionally left blank
for double-sided reproduction

[This page left blank for drop in of Form DD 1155]

This page was intentionally left blank
for double-sided reproduction.

APPENDIX D
CLIN TABLE WITH PRICING

CLIN	Description	OEM or Supplier	Model #	Unit Price
0001AA	High-Performance Rugged Rack-Mounted Dual-Monitor Console	SAIC/HP	S1300A	$25,551
0003AA	High-Performance Rugged Rack-Mounted Single-Monitor Console	SAIC/HP	S1301A	$23,851
0005AA	Medium-Performance Rugged Rack-Mounted Single-Monitor Console	SAIC/HP	S1302A	$22,351
0007AA	High-Performance Rugged Rack-Mounted Server	HP	S1303A	$20,751
0009AA	Tactical Rugged Rack-Mounted Server/Workstation	SAIC/HP	S1304A	$18,751
♦0010AA	**Telos ACE VME Portable Workstation Without LCD Display – Includes HP Model 743*i* (100 MHz), 64-MB RAM, 3.5" Floppy, Keyboard, Trackball, (2) 4-GB Removable Hard Disk Drives (FW-SCSI), MIL-STD-188 8-channel mux Interface, 24-bit Graphics, Expansion Module with 4-mm DAT Drive, CD-ROM, HP-UX, and Documentation.**	**Telos**	**S5120A**	**$46,710**
♦0010AB	**Telos ACE VME Portable Workstation With Color LCD Display – Includes HP Model 743*i* (100 MHz), 128-MB RAM, 12.9" LCD, 3.5" Floppy, Keyboard, Trackball, (2) 4-GB Removable Hard Disk Drives (FW-SCSI), 8-bit VME Graphics, Expansion Module with 4-mm DAT Drive, CD-ROM, HP-UX, and Documentation.**	**Telos**	**S5121A**	**$44,023**
♦0010AC	**Telos ACE VME Portable Workstation With Color LCD Display – Includes HP Model 743*i* (100 MHz), 128-MB RAM, 12.9" Color LCD, 3.5" Floppy, Keyboard, Trackball, (2) 4-GB Removable Hard Disk Drives (SE-SCSI), 8-bit VME Graphics, Expansion Module with 4-mm DAT Drive, CD-ROM, HP-UX, and Documentation.**	**Telos**	**S5122A**	**$43,651**
♦0010AD	**VME Portable Workstation External Color LCD Display Module (12.9" Diagonal Screen, 1280x1024)**	**Telos**	**S5124A**	**$20,157**
♦0010AE	**8-Bit VME Graphics Controller for an External LCD or CRT Display (for CLINs 0010AA, 0010AB, and 0010AC)**	**Telos**	**S5125A**	**$7,485**
♦0010AF	**24-Bit VME Graphics Controller for an External LCD or CRT Display (for CLINs 0010AA, 0010AB, and 0010AC)**	**Telos**	**S5126A**	**$14,841**
♦0010AG	**4-GB Removable Hard Disk Drive (SE-SCSI) (for CLINs 0010AA, 0010AB, and 0010AC)**	**Telos**	**S5129A**	**$2,806**
♦0010AH	**4-GB Removable Hard Disk Drive (FW-SCSI) (for CLINs 0010AA, 0010AB, and 0010AC)**	**Telos**	**S5130A**	**$3,032**
♦0010AJ	**8-Channel Asynchronous Multiplexer MIL-STD-188 (for CLINs 0010AA, 0010AB, and 0010AC)**	**Telos**	**S5132A**	**$2,525**
♦0010AK	**Keyboard with Trackball (for CLINs 0010AA, 0010AB, and 0010AC)**	**Telos**	**S5135A**	**$2,311**
♦0010AL	**Hard Transit Case (for CLINs 0010AA, 0010AB, and 0010AC)**	**Telos**	**S5136A**	**$865**
♦0011AF	**SAIC Talon Rugged Portable Workstation with 64-MB RAM**	**SAIC**	**S4331A**	**$22,360**
♦0011AG	**SAIC Talon Rugged Portable Workstation with 128-MB RAM**	**SAIC**	**S4332A**	**$23,720**

CLIN	Description	OEM or Supplier	Model #	Unit Price
0013AA	High-Performance Desktop Single-Monitor Workstation	HP	S1306A	$15,751
♦0013AB	**J210XC Workstation Bundle – Includes PA-7200 Processor (120 MHz), 64-MB RAM, 2-GB Hard Disk Drive (FW-SCSI), Visualize-8 Color Graphics, 19" Color Monitor, 3.5" Floppy Drive, CD-ROM, Keyboard, Mouse, Standard OS (CLIN 0200AC), and Documentation.**	**HP**	**S5003A**	**$22,660**
♦0014AA	**C110 Workstation Bundle – Includes PA-7200 Processor (120 MHz), 32-MB RAM, 2-GB Hard Disk Drive (FW-SCSI), Color Graphics, CD-ROM, 17" Color Monitor, 3.5" Floppy Drive, Keyboard, Mouse, Standard OS (CLIN 0200AC), and Documentation.**	**HP**	**S5110A**	**$11,089**
0015AA	Medium-Performance Desktop Single-Monitor Workstation	HP	S1307A	$14,251
♦0015AB	**Medium-Performance 2-Way SMP Server (Model D350) – Includes Dual PA-7200 Processors (100 MHz), 128-MB RAM, 3.5-inch floppy, 2-GB Hard Disk Drive (FW-SCSI), 4-GB DDS DAT Drive, CD-ROM, HP-UX (16-User License), Recovery Media, Preloaded, Console Terminal, and Documentation.**	**HP**	**S5080A, C1064AX**	**$26,806**
♦0015AC	**Medium-Performance Server (Model K220) – Includes PA-7200 Processor (120 MHz), 128-MB RAM, 2.1-GB High-Performance Disk Module (FW-SCSI), 4-GB DAT Drive, CD-ROM, HP-UX (16-User License), Recovery Media, Preloaded, Console Terminal, and Documentation.**	**HP**	**S5081A**	**$40,428**
♦0015AD	**Enhanced Medium-Performance Server (Model K420) – Includes PA-7200 Processor (120 MHz), 128-MB RAM, (2) 2.1-GB High-Performance Disk Modules (FW-SCSI), 4-GB DAT Drive, CD-ROM, HP-UX (16-User License), Recovery Media, Preloaded, Console Terminal, and Documentation.**	**HP**	**S5082A, C1064AX**	**$56,808**
0017AA	High-Performance Desktop Server	HP	S1308A	$16,751
0019AB	Low-Cost Workstation Bundle (HP 712/80)	HP	S4754A	$3,296
0019AC	Low-Cost Workstation-Server Bundle (HP 712/80)	HP	S1309A	$3,495
0020AA	Low-Cost Desktop Workstation Bundle (HP 712/100)	HP		$6,000
♦0021AF	**Portable Workstation Bundle (SAIC Galaxy) – Includes 64-MB RAM, 10.4" SVGA Color Display, 2-GB Removable Hard Disk Drive, 3.5" Floppy Drive, Keyboard, Trackball, Standard OS, DOS Windowing/Networking Environment, and Documentation.**	**SAIC**	**S4815A**	**$15,460**
♦0021AG	**Portable Workstation Bundle (SAIC Galaxy) – Includes 128-MB RAM, 10.4" SVGA Color Display, 2-GB Removable Hard Disk Drive, 3.5" Floppy Drive, Keyboard, Trackball, Standard OS, DOS Windowing/Networking Environment, and Documentation.**	**SAIC**	**S4816A**	**$16,820**
0023AA	High-Performance Rack-Mount Workstation/Server	HP	S1311A	$15,810
0023AB	RAM Expansion – 32-MB (for CLIN 0023AA)	HP	A3026A	$1,351
0023AC	RAM Expansion – 128-MB (for CLIN 0023AA)	HP	A3027A	$5,401
0023AD	PCMCIA Interface (for CLIN 0023AA)	HP	McDisk - D-2	$324
0025AA	Medium-Performance Rack-Mount Workstation/Server	HP	S1316A	$14,310
0025AB	RAM Expansion – 32-MB (for CLIN 0025AA)	HP	S1312A	$1,351
0025AC	RAM Expansion – 128-MB (for CLIN 0025AA)	HP	S1313A	$5,401
0025AD	PCMCIA Interface (for CLIN 0025AA)	HP	McDisk - D-2	$324
0027AA	High-Performance Desktop Workstation/Server (64-MB RAM)	HP	S1317A	$14,810

CLIN	Description	OEM or Supplier	Model #	Unit Price
0027AB	RAM Expansion – 32-MB (for CLIN 0027AA)	HP	S1312A	$1,351
0027AC	RAM Expansion – 128-MB (for CLIN 0027AA)	HP	S1313A	$5,401
0027AD	PCMCIA Interface (for CLIN 0027AA)	HP	McDisk - D-2	$324
0027AE	High-Performance Desktop Workstation/Server Tie-Down Kit (for CLIN 0027AA)	SAIC	71617-1	$353
0027AG	High-Performance Desktop Workstation/Server (128-MB RAM)	HP	S4753A	$17,510
♦0027AH	**J210XC Workstation – Includes PA-7200 Processor (120 MHz) with 2-MB Cache, 64-MB RAM, Standard OS (CLIN 0200AC), and Documentation.**	**HP**	**A4481A, (2) CLIN 0027AB, and CLIN 0200AC**	**$16,944**
♦0027AJ	**J210XC Workstation – Includes PA-7200 Processor (120 MHz) with 2-MB Cache, 128-MB RAM, Standard OS (CLIN 0200AC), and Documentation.**	**HP**	**A4481A, CLINs 0027AC and 0200AC**	**$20,994**
♦0028AA	**C110 Workstation – Includes C110 Base Processor, 32-MB RAM, Standard OS (CLIN 0200AC), and Documentation.**	**HP**	**A4200A, CLINs 0028AC and 0200AC**	**$8,178**
♦0028AB	**C110 Workstation – Includes C110 Base Processor, 128-MB RAM, Standard OS (CLIN 0200AC), and Documentation.**	**HP**	**A4200A, CLINs 0028AD and 0200AC**	**$11,298**
♦0028AC	**RAM Expansion – 32-MB (for CLINs 0028AA and 0028AB)**	**HP**	**A4207A**	**$1,351**
♦0028AD	**RAM Expansion – 128-MB (for CLINs 0028AA and 0028AB)**	**HP**	**A4208A**	**$5,401**
♦0028AE	**1.44-MB Internal Floppy Drive (for CLINs 0028AA and 0028AB)**	**HP**	**A4464A**	**$76**
♦0028AF	**Internal CD-ROM (SE-SCSI) (for CLINs 0028AA and 0028AB)**	**HP**	**A4463A**	**$350**
♦0028AG	**2-GB Internal Hard Disk Drive (FW-SCSI) (for CLINs 0028AA and 0028AB)**	**HP**	**A4460A**	**$801**
♦0028AH	**4-GB Internal Hard Disk Drive (FW-SCSI) (for CLINs 0028AA and 0028AB)**	**HP**	**A4461A**	**$1,200**
♦0028AJ	**4-GB 4-mm Internal DAT Drive (SE-SCSI) (for CLINs 0028AA and 0028AB)**	**HP**	**A4466A, (2) 92300A**	**$1,330**
0029AA	Medium-Performance Desktop Workstation (32-MB RAM)	HP	S1319A	$13,310
0029AB	RAM Expansion – 32-MB (for CLIN 0029AA)	HP	S1312A	$1,351
0029AC	RAM Expansion – 128-MB (for CLIN 0029AA)	HP	S1313A	$5,401
0029AD	PCMCIA Interface (for CLIN 0029AA)	HP	McDisk - D-2	$324
0029AE	Medium-Performance Desktop Workstation Tie-Down Kit (for CLIN 0029AA)	SAIC	S1318A	$353
0031AB	RAM Expansion – 8-MB (for CLINs 0021AF and 0031AH)	HP	A2577A	$341
0031AC	RAM Expansion – 16-MB (for CLINs 0021AF and 0031AH)	HP	A2578A	$681
0031AD	RAM Expansion – 32-MB (for CLINs 0021AF and 0031AH)	HP	A2827A	$2,721
0031AF	Internal Fax Modem (for SAIC Galaxy or Talon Portable Workstations)	HP	S1325A	$324

CLIN	Description	OEM or Supplier	Model #	Unit Price
♦0031AH	**Portable Workstation Bundle (SAIC Galaxy) – Includes HP 712/60, 32-MB RAM, 10.4" SVGA Color Display, 2-GB Removable Hard Disk Drive, 3.5" Floppy Drive, Keyboard, Trackball, Standard OS, DOS Windowing/Networking Environment, and Documentation.**	**SAIC**	**S4818A**	**$14,100**
♦0031AJ	**External UPS (Shore Power) (for Portable Workstation CLIN 0031AH)**	**SAIC**	**S5203A**	**$400**
♦0031AK	**External UPS (Shipboard Power) (for Portable Workstation CLIN 0031AH)**	**SAIC**	**S5204A**	**$1,200**
♦0031AL	**DC-AC Power Converter for Vehicle Power (for CLIN 0031AH)**	**SAIC**	**S5205A**	**$3,000**
♦0033AH	**Rugged Portable Workstation (SAIC Talon) – Includes HP 712/60, 32-MB RAM, 10.4" SVGA Color Display, 2-GB Hard Disk Drive, 3.5" Floppy Drive, PCMCIA, Keyboard, Trackball, Standard OS, DOS Windowing/Networking Environment, and Documentation.**	**HP**	**S4820A**	**$21,000**
0035AA	Low-Cost Desktop Workstation/Server (HP 712/80 with 16-MB RAM)	HP	S1327A	$1,900
0035AB	RAM Expansion – 8-MB (CLINs 0035AA and 0036AA)	HP	S4216A	$341
0035AC	RAM Expansion – 16-MB (CLINs 0035AA and 0036AA)	HP	S1322A	$681
0035AD	RAM Expansion – 64-MB (CLINs 0035AA and 0036AA)	HP	S1323A	$2,721
0035AE	PCMCIA Interface (for CLINs 0035AA and 0036AA)	HP	S3918A	$307
0035AF	Low-Cost Desktop Workstation/Server Tie-Down Kit (for CLIN 0035AA)	SAIC	S1329A	$331
0035AG	RAM Expansion – 32-MB (for CLIN 0035AA and 0036AA)	HP	S4756A	$1,361
0035AH	Low-Cost Desktop Workstation/Server (HP 712/80 with 32-MB RAM)	HP	S1327B	$2,600
0035AJ	Low-Cost Desktop Workstation/Server (HP 712/80 with 64-MB RAM)	HP	S1327C	$4,000
0036AA	Low-Cost Desktop Workstation/Server (HP Model 712/100 with ***No RAM*** Included in Base System)	HP	A4345A	$2,499
0036AH	Second Serial Port (RS232-C) (for CLINs 0035AA and 0036AA)	HP	A4013A	$212
0036AJ	Second Serial Port (RS232-C) and LAN AUI Port (for CLINs 0035AA and 0036AA)	HP	A4014A	$500
0036AK	Second Serial Port (RS232-C) and X.25 Port (for CLINs 0035AA and 0036AA)	HP	A4015A	$572
0036AL	Second Monitor Port and Second LAN AUI Port (for CLINs 0035AA and 0036AA)	HP	A4217A	$1,584
0036AM	Second Monitor Port – for Two Monitors Total (for CLINs 0035AA and 0036AA)	HP	A2878A	$1,078
0037AD	HP Model 743*i*/64 With On-Board 8-Plane Graphics – Includes Expansion Slot Kit, Cables for I/O and Video Interfaces, Standard OS (CLIN 0200AC), Real-Time OS (CLIN 0200AE), and Documentation. *(No RAM included in this system)*	HP	S4757A	$4,380
0037AE	HP Model 743*i*/64 Without On-Board 8-Plane Graphics – Includes Expansion Slot Kit, Cables for I/O Interface, Standard OS (CLIN 0200AC), Real-Time OS (CLIN 0200AE), and Documentation. *(No RAM included in this system)*	HP	S4758A	$3,610
0037AF	HP Model 743*i*/100 With On-Board 8-Plane Graphics – Includes Expansion Slot Kit, Cables for I/O and Video Interfaces, Standard OS (CLIN 0200AC), Real-Time OS (CLIN 0200AE), and Documentation. *(No RAM included in this system)*	HP	S4759A	$6,500

CLIN	Description	OEM or Supplier	Model #	Unit Price
0037AG	HP Model 743*i*/100 Without On-Board 8-Plane Graphics – Includes Expansion Slot Kit, Cables for I/O Interface, Standard OS (CLIN 0200AC), Real-Time OS (CLIN 0200AE), and Documentation. *(No RAM included in this system)*	HP	S4760A	$6,500
0037AH	HP Model 748*i*/64 Integrated System With On-Board 8-Plane Graphics – Includes 64-MB RAM, 1-GB Hard Disk Drive (SE-SCSI), Standard OS (CLIN 0200AC), and Documentation.	HP	S4761A	$8,969
0037AJ	HP Model 748*i*/64 Integrated System Without On-Board 8-Plane Graphics – Includes 64-MB RAM, 1-GB Hard Disk Drive (SE-SCSI), Standard OS (CLIN 0200AC), and Documentation.	HP	S4761B	$8,474
0037AK	HP Model 748*i*/100 Integrated System With On-Board 8-Plane Graphics – Includes 64-MB RAM, 1-GB Hard Disk Drive (SE-SCSI), Standard OS (CLIN 0200AC), and Documentation.	HP	S4763A	$12,533
0037AL	HP Model 748*i*/100 Integrated System Without On-Board Graphics – Includes 64-MB RAM, 1-GB Hard Disk Drive (SE-SCSI), Standard OS (CLIN 0200AC), and Documentation.	HP	S4763B	$12,044
0037AM	RAM Expansion – 32-MB (for CLINs 0037AD–AL)	HP	A4265A	$1,361
0037AN	RAM Expansion – 64-MB (for CLINs 0037AD–AL)	HP	A4266A	$2,721
0037AP	8-Plane Color Graphics Mezzanine Card (for CLINs 0037AE and 0037AG)	HP	A4267A	$1,154
0037AQ	PCMCIA Adapter Mezzanine Card (for CLINs 0037AD–AL)	HP	Z5177A	$580
0037AR	VME BackPlane Networking Software	HP	B3802A	$1,394
0037AS	Single-Channel VME Graphics Card (for CLINs 0037AD–AL)	Megatek	12030197	$3,125
0037AT	Dual-Channel VME Graphics Card (for CLINs 0037AD–AL)	Megatek	12030196	$4,550
0037AV	10-Foot Video Cable	Megatek	13000307	$91
0037AW	Maxim Console Cable Kit	Megatek	81698	$91
♦0037AX	**Video Cable Adapter (for Monitors with 15-Pin Connectors)**	**Megatek**	**S3920A**	**$91**
♦0037AY	**Video Cable Adapter (for PS/2 Keyboard, Mouse or Trackball)**	**Megatek**	**S5213A**	**$91**
♦0038AA	**V743/100 VXI Embedded Controller Module – Includes HP PA-RISC 7100LC Processor (100 MHz), 32-MB RAM, HP-IB, LAN, RS-232, PS-2, SCSI-2, Selectable Graphics Port, Stereo Audio, Clock/Trigger Ports, HP-UX, LTU, and SCSI Terminator**	**HP**	**E1498A, E1498A #201**	**$11,544**
♦0038AB	**V743/100 VXI Embedded Controller Module – Includes HP PA-RISC 7100LC Processor (100 MHz), 64-MB RAM, HP-IB, LAN, RS-232, PS-2, SCSI-2, Selectable Graphics Port, Stereo Audio, Clock/Trigger Ports, HP-UX, LTU, and SCSI Terminator**	**HP**	**E1498A, E1498A #ANE/201**	**$13,790**
♦0038AC	**V743/100 VXI Embedded Controller Module – Includes HP PA-RISC 7100LC Processor (100 MHz), 128-MB RAM, HP-IB, LAN, RS-232, PS-2, SCSI-2, Selectable Graphics Port, Stereo Audio, Clock/Trigger Ports, HP-UX, LTU, and SCSI Terminator**	**HP**	**E1498A, E1498A #ANS/201**	**$18,283**
♦0038AD	**13-Slot C-Size High-Power VXI Mainframe**	**HP**	**E1401B, E1401B #908/916/917/ 918**	**$6,282**
♦0038AE	**VXI Analog-to-Digital Converter (ADC) Module (10MSample/Second A/D with 23 Bits of Resolution) – Includes Signal Conditioning, Tunable Filter, 4MSample Memory, High-Speed Local Bus Support, and 8-MB RAM**	**HP**	**E1430A, E1430A #AYD**	**$11,638**
♦0038AF	**VXI 25.6 KHz 8-Channel Digitizer Module – Includes Programmable Gain, ICP, Anti-Alias Filters, Local Bus and Frequency Spans (65, 536-Hz Sampling)**	**HP**	**E1431A**	**$7,181**

CLIN	Description	OEM or Supplier	Model #	Unit Price
♦0038AG	**VXI SCSI Disk Module – Includes 1-GB Hard Disk Drive and 21-MB Floptical Drive (SCSI Interface)**	**HP**	**E4208B**	**$3,800**
♦0038AH	**VXI Data Disk/DAT/SCSI-2 Module – Includes Two-Slot, High-Speed, Dual SCSI Interface with 2.1-GB Internal Hard Disk Drive (FW-SCSI) and 4-GB (8-GB Typical with Data Compression) DDS DAT Drive (SE-SCSI)**	**HP**	**E1562A**	**$12,350**
♦0038AJ	**VXI Data Disk/DAT/SCSI-2 Module – Includes Two-Slot, High-Speed, Dual SCSI Interface with 2.1-GB Internal Hard Disk Drive (FW-SCSI)**	**HP**	**E1562B**	**$14,440**
♦0038AK	**VXI Digital Signal Processor (68030-Based Measurement Controller, 96002 DSP Chip) – Includes 16-MB RAM and High-Speed Local Bus Support**	**HP**	**E1485A**	**$11,619**
♦0038AL	**VXI System Disk with DAT Drive Module – Includes 2.1-GB Internal Hard Disk Drive (SE-SCSI) and 4-GB DDS DAT Drive**	**HP**	**E3249A**	**$6,175**
♦0038AM	**VXI 50 Ohm RF Multiplexer – Includes Six Independent 1x4 Multiplexers for Switching Signals from DC to 3.0GHz (SMB Connections)**	**HP**	**E1472A**	**$2,297**
0039AA	Rugged 72" Rack (Rack Type R1)	Everest	801050-100	$1,501
0041AE	Connector, DB15 (802.3 AUI)	SAIC	70565-1	$22
0041AG	Connector, FDDI TCU	SAIC	70571-1	$52
0041AH	Connector, Graphics Monitor	SAIC	70570-1	$45
0041AJ	Connector, Centronics (8-Bit Parallel)	SAIC	7056-4-1	$41
0041AK	Connector, Bus Expansion to VME	SAIC	70563-1	$60
0041AM	Connector, SDMS	SAIC	70572-1	$43
0041AN	Connector, Keyboard/Trackball Pairs	SAIC	70574-1	$34
0041AP	Connector, SE-SCSI	SAIC	70561-1	$51
0041AQ	Connector, FW-SCSI (Differential)	SAIC	70560-1	$51
0041AR	Connector, FW-SCSI	SAIC	70579-1	$51
0041AS	Connector, FW-SCSI	SAIC	70580-1	$60
0041AT	Connector, NTDS Type A, B, C, H, (MIL-STD-1397)	SAIC	70575-1	$150
0041AU	Connector, NTDS Type E TRIAX	SAIC	70581-1	$52
0041AV	Connector, MIL-STD-1553 (BJ78)	SAIC	70582-1	$29
0041AY	Connector, RJ11	SAIC	70577-1	$25
0041AZ	Connector, RJ45	SAIC	70576-1	$25
0041BA	Connector, (MS3400DV20B4P)	SAIC	70578-1	$132
0041BB	Connector, Mating Military Power Connector (MS3400DV20B4S)	SAIC	70585-1	$30
0041BC	Connector, DB9 (Female)	SAIC	70586-1	$22
0041BD	Connector, DB25 (Female)	SAIC	70587-1	$22
0042AA	Cable Assembly, External AC Power	SAIC	70501-1	$97
0043AA	Power Distribution Unit (PDU)	Elgar	PDU 2000	$741
0043AB	Slide-Out Rack Shelf	SAIC	70508-1	$151
0043AJ	Detailed Drawing Package for Bullnose Assemblies	SAIC	S1383A	$51

CLIN	Description	OEM or Supplier	Model #	Unit Price
0043AK	Detailed Drawing Package for Console Cabinet	SAIC	S1384A	$51
0045AA	Rack-Mount Full-Height Mass Storage Expansion Chassis	Sigma	SA-H173/4	$501
0045AC	External Mass Storage Tie-Down Kit (Light weight)	SAIC	71601-1	$135
0045AD	External Mass Storage Tie-Down Kit (Heavy weight)	SAIC	71601-2	$168
♦0045AE	**Rugged Portable Workstation Expansion Chassis – Includes One 2-GB Hard Disk Drive (Used with CLINs 0011AF, 0011AG, and 0033AH)**	**SAIC**	**S4692A**	**$12,000**
♦0045AF	**Replacement Battery (for CLINs 0011AF, 0011AG, and 0033AH)**	**SAIC**	**S4697A**	**$300**
0047AA	3.5" Floppy Disk Drive – Internal (SE-SCSI)	HP	S1389A	$151
0047AB	3.5" Floppy Disk Drive – Internal (PC style)	HP	A4068A	$76
0047AD	5.25" Floppy Disk Drive – Internal (SE-SCSI)	TEAC	FD55-GS751	$151
0047AE	5.25" Floppy Disk Drive – External (SE-SCSI)	TEAC	S1405A	$151
0049AA	CD-ROM Drive – Internal (SE-SCSI)	HP	S4908A	$251
0049AC	CD-ROM Drive – External (SE-SCSI)	Toshiba	A2655A	$251
0049AD	CD-ROM Caddy	HP	2293-80001	$26
0049AE	CD-ROM Library (SE-SCSI)	Kubik	CDR-240MA	$4,001
0055AC	Medium-capacity (1-GB) Fixed Hard Disk Drive – Internal (SE-SCSI)	HP	S1469A	$601
0055AD	Medium-capacity (1-GB) Fixed Hard Disk Drive – Internal (FW-SCSI)	HP	A4117A	$601
0055AE	Medium-capacity (1-GB) Fixed Hard Disk Drive – External (SE-SCSI)	HP	A4119A	$601
0055AF	High-capacity (2-GB) Fixed Hard Disk Drive – Internal (FW-SCSI)	HP	S1481A	$801
0055AG	High-capacity (2-GB) Fixed Hard Disk Drive – External (SE-SCSI)	HP	S1482A	$951
0055AH	High-capacity (2-GB) Fixed Hard Disk Drive – Internal (SE-SCSI)	HP	A4272A	$801
0055AL	No Disk System	–	–	$0
♦0055AN	**4-GB Fixed Hard Disk Drive – Internal (FW-SCSI) for J- and C-Class Workstations/Servers**	**HP**	**A4356A**	**$1,200**
♦0055AP	**4-GB Fixed Hard Disk Drive – External (SE-SCSI) for J- and C-Class Workstations/Servers**	**HP**	**C2967A, C2908A, K2291**	**$1,267**
♦0055AQ	**4-GB Fixed Hard Disk Drive – External (FW-SCSI) for J- and C-Class Workstations/Servers**	**HP**	**C2966A, C2911A, C2905A**	**$1,293**
0057AA	Multi-Drive Removable Hard Disk Drive Chassis – External Rack-Mount (SE-SCSI)	Sigma	SA-H364	$501
0057AB	Removable Hard Disk Drive (2-GB)	Sigma/HP	908388-0100	$901
0057AC	Multi-Drive Removable Hard Disk Drive Chassis – External Desk-Mount (SE-SCSI)	Sigma	SA-H365	$501
0059AA	RAID Fixed Hard Disk Array – External Rack-Mount (SE-SCSI) – Includes Five CLIN 0059AB	Sigma	SA-H350R	$5,001
0059AB	RAID Array Hard Disk Drive (SE-SCSI)	Sigma/HP	908388-0100	$901
0059AD	RAID Fixed Hard Disk Array – External Desk-Mount (FW-SCSI) – Includes Five CLIN 0057AB	Sigma	SA-350T	$5,001

CLIN	Description	OEM or Supplier	Model #	Unit Price
0059AE	RAID Fixed Hard Disk Array – External Rack-Mount (FW -SCSI) – Includes Five CLIN 0057AB	Sigma	SA-H350R	$5,001
0059AF	RAID Fixed Hard Disk Array – External Desktop (SE-SCSI) – Includes Five CLIN 0057AB	Sigma	SA-H350T	$5,001
♦0060AA	**High Availability Storage Enclosure – Deskside**	**HP**	**A3311A, A3311A #801, C2905A**	**$830**
♦0060AB	**High Availability Storage Enclosure – Commercial Rack-Mount**	**HP**	**A3312A, A3312A #801, C2905A**	**$830**
♦0060AC	**Hot-Pluggable Power Supply Module**	**HP**	**A3325A**	**$315**
♦0060AD	**Hot-Pluggable Fan Module**	**HP**	**A3326A**	**$140**
♦0060AE	**2.1-GB LP High-Performance Disk Module (SE-SCSI) (for CLINs 0130AA and 0130AB)**	**HP**	**A3317A**	**$1,120**
♦0060AF	**2.1-GB LP High-Performance Disk Module (FW-SCSI) (for CLINs 0130AA and 0130AB)**	**HP**	**A3318A**	**$1,120**
♦0060AG	**4.3-GB LP High-Performance Disk Module (SE-SCSI) (for CLINs 0130AA and 0130AB)**	**HP**	**A3319A**	**$1,680**
♦0060AH	**4.3-GB LP High-Performance Disk Module (FW-SCSI) (for CLINs 0130AA and 0130AB)**	**HP**	**A3320A**	**$1,680**
♦0060AJ	**4-GB DDS-2 DAT Drive Module (SE-SCSI) (for CLINs 0130AA and 0130AB)**	**HP**	**A3322A**	**$1,957**
♦0060AK	**Single SCSI Bus Configuration Cable**	**HP**	**S5053A**	**$63**
♦0060AL	**1-Meter SE-SCSI Cable Kit**	**HP**	**A3311A #825**	**$63**
♦0060AM	**2-Meter SE-SCSI Cable Kit**	**HP**	**A3311A #827**	**$70**
0061AC	2-GB DAT 4-mm Tape Drive – Internal (SE-SCSI)	HP	S1515A	$1,201
0061AD	2-GB DAT 4-mm Tape Drive – External (SE-SCSI)	HP	A2656A	$1,201
0061AE	5-GB 8-mm Tape Drive – Internal (SE-SCSI)	Exabyte	EXB-8505S	$1,101
0061AF	5-GB 8-mm Tape Drive – External (SE-SCSI)	Exabyte	EXB-8505ST	$1,201
♦0061AH	**4-GB 4-mm DDS DAT Drive – Internal (SE-SCSI) (for the J-Class Workstations)**	**HP**	**A4467A, (2) 92300A**	**$1,330**
♦0061AJ	**4-GB 4-mm DDS DAT Drive – External (SE-SCSI) (for the J-Class Workstations)**	**HP**	**C2983A, C2908A, K2291, (2) 93200A**	**$1,525**
0063AA	LaserJet 4 Plus (Printer Type P1)	HP	C2037A #ABA	$2,351
0063AB	Memory Expansion (1-MB) (for CLIN 0063AA)	HP	C2063A	$91
0063AC	LaserJet 4Si (Printer Type P2)	HP	C2010A	$3,701
0063AD	Memory Expansion (1-MB) (for CLIN 0063AC)	HP	C2063A	$91
0063AG	DeskJet 1200C (Printer Type P4)	HP	C1676A	$2,001
0063AH	Memory Expansion (1-MB) (for CLIN 0063AG)	HP	C2063A	$91
0063AJ	DeskJet 1200C (Printer Type P5)	HP	C1676A	$2,001

CLIN	Description	OEM or Supplier	Model #	Unit Price
0063AK	Memory Expansion (1-MB) (for CLIN 0063AJ)	HP	C2063A	$91
0063AL	Mannesman Tally Dot-Matrix Printer (Printer Type P6)	Mannesman Tally	MT-150/24	$401
0063AP	Printer Tie-Down Kit (Printer Types P1, P4, P5, and P6) (Medium Weight)	SAIC	71600-1	$151
0063AQ	Printer Tie-Down Kit (Printer Types P2 and P3) (Heavy Weight)	SAIC	71595	$151
0063AR	Network Printer Interface	Emulex	P2504-P SL-NTL	$597
0063AS	RAM Expansion – 8-MB (for CLIN 0063AA)	HP	C3133A	$440
0063AT	RAM Expansion – 16-MB (for CLIN 0063AA)	HP	C3146A	$987
0063AU	RAM Expansion – 8-MB (for CLIN 0063AC)	HP	C2066A	$478
0063AV	RAM Expansion – 8-MB (for CLIN 0063AG)	HP	C2066A	$478
0063AW	RAM Expansion – 8-MB (for CLIN 0063AJ)	HP	C2066A	$478
0065AA	Keyboard Type KB1 for Rack Bullnose	Alphameric	900-1197A	$101
0065AB	Keyboard Type KB1 (Benign)	HP	A2840B	$76
0065AD	Interface for 2nd HMI Ports (PS/2 Keyboard and Trackball)	HP	S1510A	$176
0065AE	Keyboard Type KB1 with Tie-Down Kit	Alphameric	900-1197	$150
0067AA	Trackball Type TB1 (Rugged)	Penny & Giles	D48644	$111
0067AB	Trackball Type TB2 (Benign – Penny & Giles)	Penny & Giles	D48645	$101
0067AC	Trackball Tie-Down Kit	SAIC	71603-1	$28
0067AD	Mouse and Pad	HP	A2839A	$51
0067AE	Trackball Type TB2 (Benign – Evergreen)	Evergreen	Diamond XL-5V	$101
0069AA	HMI Selection Switch	Quad Electronics	T1723-009	$33
0069AB	Processor Selection Switch	Quad Electronics	T1723-008	$292
0075AA	Flat-Panel Display/Input Device	Dolinar Brothers	T210RX12	$1,002
0075AB	Touch-Sensitive Overlay for 19" Monitor	MicroTouch	ClearTek 1000	$251
0077AA	Headset with Microphone and Audio Module (with Rack Plug Connector)	SennHeiser	HME25-1	$201
0077AB	Headset with Microphone and Audio Module (with 3.5-mm Plug Connector)	SennHeiser	HME25-3.5	$201
0079AA	14" Pedestal-Mount Color Monitor	Mitsubishi	RGB5600	$801
0080AA	17" Pedestal-Mount Color Monitor	HP	A4330A	$1,000
0081AA	19" Pedestal-Mount Color Monitor	HP	A4331A	$1,201
0081AB	19" Rack-Mount Color Monitor	SAIC/HP	A4033A/20-32013	$1,301
0081AJ	Rear Projection Screen for Large Screen Display	Harris	DA-TEX	$411
0081AK	Front Projection Screen for Large Screen Display	Harris	DA-MAT	$461
0081AL	Ruggedized Ceiling Mount Kit for Large Screen Display	Ampro	69499	$1,545

CLIN	Description	OEM or Supplier	Model #	Unit Price
0081AM	Rear-Mount Kit for Large Screen Display	Ampro	69501-1,-2	$1,545
0081AN	Color Flat Screen Display	Dolinar Brothers	VGA-M3000-P	$3,001
0081AP	Color Flat Screen Display Tie-Down Kit	SAIC	71605-1	$33
0081AQ	Shielded Large Screen Display	Ampro	3600	$19,950
♦0081AS	**Spare Parts Kit for Shielded Large Screen Display**	**Ampro**	**69618-1, 69618-2**	**$20,350**
0083AF	Video Frame Grabber	Parallax	PV-700	$2,501
0083AG	Color Video Camera	Pulnix	TMC-7-581, SNP-T03-584, 0612-C	$501
0083AJ	X-Windows Terminal	HP	C3253A #191, C2737A	$1,301
0083AM	Memory Expansion – 8-MB (for CLIN 0083AJ)	HP	C2323A	$341
0083AN	Memory Expansion – 16-MB (for CLIN 0083AJ)	HP	C2747A	$681
0083AP	Memory Expansion – 32-MB (for CLIN 0083AJ)	HP	C2748A	$1,351
0085AC	RS-232 Line Driver	Altex	IC-150	$56
0085AE	Centronics Line Driver	Altex	PLE110	$63
0085AN	Video Distribution Amplifier	InLine	IN3121	$245
0085AQ	Video Linear Amplifier	InLine	IN3012	$175
♦0086AA	**VME Expansion Chassis – Includes 12 6Ux160mm Card Slots and Two Half-Height 5.25" SE-SCSI Device Bays**	**Hybricon**	**078-255**	**$2,956**
♦0086AB	**VME Expansion Chassis Rack-Mounting Kit – Includes Rails and Low Smoke Power Cable (for CLIN 0086AA)**	**SAIC**	**S5115A**	**$520**
♦0086AC	**EISA-to-VME Bridge Subsystem**	**BIT3**	**487-1**	**$3,900**
♦0086AD	**EISA-to-VME Bridge Subsystem – Low Smoke Cable**	**BIT3**	**S5117A**	**$570**
0087AA	Surge and Spike Protector (US Power)	EFI	MPS-6	$61
0087AB	Surge and Spike Protector (US Power) Tie-Down Kit	SAIC		Included in CLIN 0087AA
0087AC	Surge and Spike Protector (Overseas Power)	EFI	IEC-453	$80
0087AD	Surge and Spike Protector Tie-Down Kit (Overseas Power)	SAIC		Included in CLIN 0087AC
0087AE	Isolation Transformer (1 kVA)	Xentek	5572	$195
0087AF	Isolation Transformer (1 kVA) Tie-Down Kit	Xentek		Included In CLIN 0087AE
0087AG	Isolation Transformer (3 kVA)	Xentek	S1617A	$311
0087AH	Isolation Transformer (3 kVA) Tie-Down Kit	Xentek		Included in CLIN 0087AE

CLIN	Description	OEM or Supplier	Model #	Unit Price
0087AL	Shipboard Power Conditioner	SAIC		Included in CLINs 0087AE and 0087AG
0087AM	Shipboard Power Conditioner Tie-Down Kit	SAIC		Included in CLIN 0087AL
0087AN	Type U1 UPS (2 kVA)	American Power Conversion	SMART UPS AP2000	$660
0087AP	Type U1 UPS (2 kVA) Tie-Down Kit	SAIC	71609-1	$9
0087AQ	Type U2 UPS with Power Conditioner (2 kVA)	Mil Power	M-120BA-1	$2,001
0087AR	Type U2 UPS (2 kVA)	Mil Power	M-120BA	$1,201
♦0088AB	**Uninterruptible Power Supply (1.3 kVA) – Commercial Rack-Mount**	**HP**	**A2996A #002 and 0E2**	**$1,505**
♦0088AC	**Uninterruptible Power Supply (1.8 kVA) – Commercial Rack-Mount**	**HP**	**A2997A #002 and 0E2**	**$1,995**
♦0088AD	**Uninterruptible Power Supply (3.0 kVA) – Commercial Rack-Mount**	**HP**	**A2998A #002 and 018**	**$4,130**
♦0088AE	**Uninterruptible Power Supply (0.6 kVA) – Floor Standing**	**HP**	**A2941A**	**$524**
♦0088AF	**Uninterruptible Power Supply (1.3 kVA) – Floor Standing**	**HP**	**A2994A #0E2**	**$1,505**
0089AA	Type GU1 GUPS (1.25 kVA)	Mil Power	M-110MA-1	$2,001
0091AA	Interactive Video Telecommunications Information Exchange Subsystem	Insoft, Parallax Graphics	C-001-RHP, PV-700	$4,701
0091AB	Single-Output 2D Graphics Subsystem (G1)	HP	A4070B	$2,311
0091AC	Multiple-Output 2D Graphics Subsystem (G2)	HP	A4078A	$3,501
0091AD	3D Graphics Subsystem (G3)	HP	A4074A	$4,001
♦0091AE	**Color Graphics Subsystem**	**HP**	**A4077A**	**$557**
♦0092AB	**Visualize-8 Graphics Subsystem**	**HP**	**A4441A**	**$3,080**
♦0092AC	**Visualize-24 Graphics Subsystem**	**HP**	**A4442A**	**$3,920**
♦0092AD	**Visualize-8 and -24 Video Out Add-On Option**	**HP**	**A4248A**	**$840**
♦0092AE	**Visualize-48 Graphics Subsystem**	**HP**	**A4244A**	**$8,960**
♦0092AF	**Visualize-48 Subsystem with 16-MB Texture Map Memory Option**	**HP**	**A4244A #AQQ**	**$11,760**
♦0092AG	**Visualize-48 Video Subsystem with Video Output Option**	**HP**	**A4244A #AQR**	**$9,800**
♦0092AH	**Visualize-48 Video Subsystem with 16-MB Texture Map Memory and Video Output Options**	**HP**	**A4244A #AQR, AQQ**	**$12,600**
♦0093CA	**Transport case for SAIC Talon Rugged Portable Workstation**	**SAIC**	**S4825A**	**$1,000**
♦0093CB	**Transport case for Rugged Expansion Chassis**	**SAIC**	**S4826A**	**$1,000**

CLIN	Description	OEM or Supplier	Model #	Unit Price
♦0093CD	Transport Case with Concentric Foam (for CLINs 0027AA, 0029AA, 0063AA, 0063AG, 0063AJ, 0079AA)	Hardigg	AL2624-1805-13916-4000	$448
♦0093CE	Transport Case with Concentric Foam (for CLINs 0063AC, 0081AA, and 0083AJ)	Hardigg	AL3232-1412-13916-5000	$522
♦0093CF	Transport Case with Concentric Foam (for CLINs 0049AE, 0059AD, and 0063AL, 0087AQ, and 0089AA)	Hardigg	AL3428-1004-13916-6000	$466
♦0093CG	Transport Case with Concentric Foam (for CLIN 0087AN)	Hardigg	AL3428-1008-13916-7000	$485
♦0093CH	Transport Case with Concentric Foam (for CLINs 0067AA, 0067AB, and 0067AD)	Hardigg	AL1010-0905-13916-1000	$265
♦0093CJ	Transport Case with Concentric Foam (for CLINs 0047AE, 0049AC, 0055AE, 0055AG, 0061AD, 0061AF, 0065AA 0083AG, 0087AA, and 0087AE)	Hardigg	AL2017-0706-13916-2000	$298
♦0093CK	Transport Case with Concentric Foam (for CLINs 0035AA, 0057AC, and 0081AN, and 0087AG)	Hardigg	AL2624-1201-13916-3000	$413
♦0125AA	HP Model D350 2-Way SMP Server System – Includes Dual PA-7200 Processors (100 MHz), 128-MB RAM, 2-GB Hot-Pluggable Disk Drive (FW-SCSI), 4-GB DDS DAT Drive, CD-ROM, 3.5" Floppy Drive, HP-UX (16-User License), Recovery Media, and Documentation.	HP	S5083A	$26,429
♦0125AB	Expansion RAM – 32-MB (for CLIN 0125AA)	HP	A3407A	$1,351
♦0125AC	Expansion RAM – 128-MB (for CLIN 0125AA)	HP	A3408A	$5,401
♦0125AD	2-GB Hot-Pluggable Disk Drive with Canister (FW-SCSI) (for CLIN 0125AA)	HP	A3306A	$1,120
♦0125AF	4-GB DDS DAT Drive – Internal (SE-SCSI) (for CLIN 0125AA)	HP	A3183A #002	$1,887
♦0125AG	8-Port MUX Card with Cabling (for CLIN 0125AA)	HP	J2482A J2467A	$686
♦0125AH	64-Port MUX Card with Cabling (for CLIN 0125AA)	HP	J2483A J2467A	$686
♦0125AJ	16-Port Module (RJ45) (for CLINs 0125AG or 0125AH)	HP	J2484A	$616
♦0125AK	16-Port Module (DB25) (for CLINs 0125AG or 0125AH)	HP	J2485A	$616
♦0125AL	Console Terminal for the D- and K-Class Servers	HP	C1064A	$627
♦0130AA	HP Model K220 System – Includes K220 SMP System with One Processor (120 MHz), 128-MB RAM, 2-GB Disk Drive, 4-GB DDS DAT Drive, CD-ROM Drive, HP-UX (16-User License), Recovery Media, Preloaded, and Documentation.	HP	S5092A	$40,051
♦0130AB	HP Model K420 System K420 SMP System – Includes One Processor (120 MHz), 128-MB RAM, (2) 2-GB Disk Drives, 4-GB DSS DAT Drive, CD-ROM Drive, HP-UX (16-User License), Recovery Media, Preloaded, and Documentation.	HP	S5093A	$56,431
♦0130AC	K-Series Processor (120 MHz) Module with 2-MB Cache Memory for CLINs 0130AA and 0130AB)	HP	A3452A	$10,500
♦0130AD	Expansion RAM – 32-MB (for CLINs 0130AA and 0130AB)	HP	A3026A	$1,351
♦0130AE	Expansion RAM – 128-MB (for CLINs 0130AA and 0130AB)	HP	A3027A	$5,401

CLIN	Description	OEM or Supplier	Model #	Unit Price
♦0130AF	Expansion RAM – Additional Memory Carrier (for CLINs 0130AA and 0130AB)	HP	A2992A	$4,165
♦0130AG	2-GB Hard Disk Drive (FW-SCSI) Add-On (for CLINs 0130AA and 0130AB)	HP	A3351A #002	$801
♦0130AH	4-GB Hard Disk Drive (FW-SCSI) Add-On (for CLINs 0130AA and 0130AB)	HP	A3353A #002	$1,200
♦0130AJ	2D Graphics Card (for CLINs 0130AA and 0130AB)	HP	A2999A	$907
♦0130AK	FW-SCSI Card (for CLINs 0130AA and 0130AB)	HP	A2969A	$907
♦0130AL	Ethernet-ThinLAN/9000 Interface (HP-PB) (for CLINs 0130AA and 0130AB)	HP	J2146A #20C	$805
♦0130AM	FDDI Single-Attached Station (for CLINs 0130AA and 0130AB)	HP	J2157A #WG2	$3,987
♦0130AN	16-Port (RJ45) RS-232 MUX (HP-PB) (for CLINs 0130AA and 0130AB)	HP	J2092A	$1,512
♦0130AP	16-Port (DB25) RS-232 MUX (HP-PB) (for CLINs 0130AA and 0130AB)	HP	J2092A #010	$1,512
♦0130AQ	16-Port (RJ45) RS-423 MUX (HP-PB) (for CLINs 0130AA and 0130AB)	HP	J2093A	$1,512
♦0130AR	16-Port (DB25) RS-423 MUX (HP-PB) (for CLINs 0130AA and 0130AB)	HP	J2093A #010	$1,512
♦0130AS	16-Port RS-232 MUX Modem (HP-PB) (for CLINs 0130AA and 0130AB)	HP	J2094A	$1,841
♦0130AT	32-Port (RJ45) RS-232 MUX (HP-PB) (for CLINs 0130AA and 0130AB)	HP	J2096A	$2,464
♦0130AU	32-Port (DB25) RS-232 MUX (HP-PB) (for CLINs 0130AA and 0130AB)	HP	J2096A #010	$2,464
♦0135AA	1.6-Meter Commercial Rack (100/120V)	HP	C2786A #AW3	$1,470
♦0135AB	Rack-Mount Kit for the 1.6-Meter Commercial Rack (CLIN 0135AA) for D-Series Servers (CLINs 0015AB and 0125AA)	HP	C2805A	$595
♦0135AC	Rack-Mount Kit for the 1.6-Meter Commercial Rack (CLIN 0135AA) for K-Series Servers (CLINs 0015AC, 0015AD, 0130AA, and 0130AB)	HP	C2804A	$595
♦0135AD	Filler Panel Kit for the 1.6-Meter Commercial Rack (CLIN 0135AA)	HP	C2791A	$77
♦0135AE	Lockable Front Door for the 1.6-Meter Commercial Rack (CLIN 0135AA)	HP	E4465A	$133
♦0135AF	Rack Tie-Together Kit for the 1.6-Meter Commercial Rack (CLIN 0135AA)	HP	E4468A	$112
♦0135AG	PDU for the 1.6-Meter Commercial Rack (for CLIN 0135AA)	HP	E4454A	$140
♦0140AB	8-User Standard OS License (for the D and K-Class Servers Only)	HP	B3897A opt AGL	$625
♦0140AC	16-User Standard OS License (for the D and K-Class Servers Only)	HP	B3897A opt AGM	$1,200
♦0140AD	32-User Standard OS License (for the D and K-Class Servers Only)	HP	B3897A opt AGN	$2,450
♦0140AE	64-User Standard OS License (for the D and K-Class Servers Only)	HP	B3897A opt AGP	$4,750

CLIN	Description	OEM or Supplier	Model #	Unit Price
♦0140AF	**Unlimited-User Standard OS License (for the D and K-Class Servers Only)**	**HP**	**B3897A opt AGS**	**$6,000**
♦0141AA	**TAC4 Server OS Additions**	**HP**	**S5141A**	**NSP**
♦0141AB	**LaserROM for S800 Servers**	**HP**	**B3921BA #OBC, #UA2**	**$520**
♦0195AA	**HP 501 Windows Application Server – Includes P133 MHz Processor, 64-MB RAM, 3.5" Floppy Drive, 1-GB Internal Disk Drive (SE-SCSI), CD-ROM, 15" Color Monitor, Keyboard, Mouse, and PC Server Software (15-User License).**	**HP**	**C3735B # ABA**	**$11,547**
♦0195AB	**HP 502 Windows Application Server – Includes Dual P133 MHz Processor, 128-MB RAM, 3.5: Floppy Drive, 2-GB Internal Disk Drive (SE-SCSI), CD-ROM, 15" Color Monitor, Keyboard, Mouse, and PC Server Software (30-User License).**	**HP**	**C3736B #ABA**	**$17,497**
♦0195AC	**Ram Expansion – 16-MB (for CLINs 0195AA and 0195AB)**	**HP**	**C2747A**	**$784**
♦0195AD	**Ram Expansion – 32-MB (for CLINs 0195AA and 0195AB)**	**HP**	**C2748A**	**$1,568**
0200AC	Standard OS (HP-UX 2-User License)	HP	HP-UX 10.	NSP
0200AD	Secure OS	HP	HP-CMW	$500
0200AE	Real-Time OS (HP-RT License Only)	HP	HP-RT	NSP
0200AF	Three-User Standard OS	HP	B2353A	$900
0200AG	Three-User Secure OS	HP	B1655A	$900
0203AA	Real-Time OS Development Environment	HP	B3138A	$7,500
0203AB	Real-Time OS Development Environment with Ada	HP		$1,000
0205AA	C and Assembler SEE: Single-User License	HP	B3560B	$100
0205AB	C and Assembler SEE: 1-5 Configuration License	HP	B3560B	$300
0205AC	C and Assembler SEE: 1-10 Configuration License	HP	B3560B	$350
0205AD	C and Assembler SEE: 1-20 Configuration License	HP	B3560B	$400
0205AE	C and Assembler SEE: 1-32 Configuration License	HP	B3560B	$450
0205AF	C and Assembler SEE: 1-64 Configuration License	HP	B3560B	$500
0205AG	C and Assembler SEE: RTC Configuration License	HP	B3560B	$1,000
0210AA	C++ SEE: Single-User License	HP	B2617B	$100
0210AB	C++ SEE: 1-5 Configuration License	HP	B2617B	$300
0210AC	C++ SEE: 1-10 Configuration License	HP	B2617B	$350
0210AD	C++ SEE: 1-20 Configuration License	HP	B2617B	$400
0210AE	C++ SEE: 1-32 Configuration License	HP	B2617B	$450
0210AF	C++ SEE: 1-64 Configuration License	HP	B2617B	$500
0210AG	C++ SEE: RTC Configuration License	HP	B2617B	$1,000
0215AA	FORTRAN SEE: Single-User License	HP	B2408A	$100
0215AB	FORTRAN SEE: 1-5 Configuration License	HP	B2408A	$300
0215AC	FORTRAN SEE: 1-10 Configuration License	HP	B2408A	$350
0215AD	FORTRAN SEE: 1-20 Configuration License	HP	B2408A	$400
0215AE	FORTRAN SEE: RTC Configuration License	HP	B2408A	$1,000

CLIN	Description	OEM or Supplier	Model #	Unit Price
0220AA	Ada SEE: Single-User License	Thomson	S1677A	$2,000
0220AB	Ada SEE: 1-5 Configuration License	Thomson	S1678A	$6,000
0225AA	COBOL SEE: Single-User License	HP	B4024BB	$94
0225AB	COBOL SEE: 1-5 Configuration License	HP	B4024BB-601	$500
0335AA	Graphical User Interface (GUI) Builder for C: Single-User License	HP	B1183B	$800
0335AB	GUI Builder for C: 1-5 Configuration License	HP	B1183B-601	$1,600
0335AC	GUI Builder for C: 1-10 Configuration License	HP	S1732A	$2,400
0335AD	GUI Builder for C: RTC Configuration License	HP	S1733A	$20,000
0340AA	GUI Builder for C++: Single-User License	HP	S1734A	$800
0340AB	GUI Builder for C++: 1-5 Configuration License	HP	S1735A	$1,600
0340AC	GUI Builder for C++: 1-10 Configuration License	HP	S1736A	$2,400
0340AD	GUI Builder for C++: RTC Configuration License	HP	S1737A	$20,000
0350AA	GUI Builder for Ada: Single-User License	HP/ATC	S1740A	$4,000
0350AB	GUI Builder for Ada: 1-5 Configuration License	HP/ATC	S1741A	$12,000
♦0370AA	**OnLine Dynamic Server: Single-User Development License**	**Informix**	**S3946A**	**$1,415**
♦0370AB	**OnLine Dynamic Server: Single-User Runtime License**	**Informix**	**S3947A**	**$877**
♦0370AC	**SE: Single-User Development License**	**Informix**	**S3948A**	**$472**
♦0370AD	**SE: Single-User Runtime License**	**Informix**	**S3949A**	**$194**
♦0370AE	**C ISAM: Single-User Development License**	**Informix**	**S3950A**	**$150**
♦0370AF	**C ISAM: Single-User Runtime License**	**Informix**	**S3951A**	**$61**
♦0370AG	**OnLine Dynamic Server Optical: Single-User Development License**	**Informix**	**S3952A**	**$150**
♦0370AH	**OnLine Dynamic Server Optical: Single-User Runtime License**	**Informix**	**S3953A**	**$93**
♦0370AJ	**4GL Compiled: Single-User Development License**	**Informix**	**S3954A**	**$844**
♦0370AK	**4GL Compiled: Single-User Runtime License**	**Informix**	**S3955A**	**$233**
♦0370AL	**4GL Rapid Development System: Single-User Development License**	**Informix**	**S3956A**	**$844**
♦0370AM	**4GL Rapid Development System: Single-User Runtime License**	**Informix**	**S3957A**	**$233**
♦0370AN	**4GL Interactive Debugger: Single-User Development License**	**Informix**	**S3958A**	**$289**
♦0370AP	**ESQL/COBOL: Single-User Development License**	**Informix**	**S3959A**	**$377**
♦0370AQ	**ESQL/C): Single-User Development License**	**Informix**	**S3960A**	**$377**
♦0370AR	**ESQL/Embedded Languages: Single-User Runtime License**	**Informix**	**S3961A**	**$140**
♦0370AS	**ISQL: Single-User Development License**	**Informix**	**S3962A**	**$517**
♦0370AT	**ISQL): Single-User Runtime License**	**Informix**	**S3963A**	**$135**
♦0370AU	**NewEra: Single-User Development License**	**Informix**	**S3964A**	**$4,244**
♦0370AV	**NewEra Application Server: Single-User Development License**	**Informix**	**S5179A**	**$472**
♦0370AW	**NewEra Base Deployment Class Libraries**	**Informix**	**S5180A**	**$266**
♦0370AX	**NewERA Viewpoint Pro: Single-User Development License**	**Informix**	**S5183A**	**$472**
♦0370AY	**NewERA Viewpoint: Single-User Development License**	**Informix**	**S5184A**	**$289**

CLIN	Description	OEM or Supplier	Model #	Unit Price
♦0371AA	**Gateway for EDA/SQL (1-20 Users) 7.x: Single-User License**	**Informix**	**S5185A**	**$18,870**
♦0371AB	**Gateway for EDA/SQL (20+ Users) 7.x: Single-User License**	**Informix**	**S5186A**	**$47,175**
0475AA	DOS Windowing Environment: Single-User License	Insignia	S1816A	$274
0475AB	DOS Windowing Environment: 1-5 Configuration License	Insignia	S1817A	$600
0475AC	DOS Windowing Environment: 1-10 Configuration License	Insignia	S1818A	$1,000
0480AA	DOS Windowing Network Interface Software: Single-User License (with No Documentation)	Insignia		Included in CLIN 0475AA
0480AB	DOS Windowing Network Interface Software: 1-5 Configuration License	Insignia		Included in CLIN 0475AB
0480AC	DOS Windowing Network Interface Software: 1-10 Configuration License	Insignia		Included in CLIN 0475AC
0481AA	Graphics Bindings	HP	S1830A	$900
0483AA	X Windows Tool Kit	HP		Included in CLIN 0205AA
0485AA	MOTIF Developer's ToolKit: Single-User License	HP		Included in CLIN 0205AA
0485AB	MOTIF Developer's ToolKit: 1-5 Configuration License	HP		Included in CLIN 0205AB
0485AC	MOTIF Developer's ToolKit: 1-10 Configuration License	HP		Included in CLIN 0205AC
0485AD	MOTIF Developer's ToolKit: RTC Configuration License	HP		Included in CLIN 0205AD
0487AA	MOTIF to Ada Bindings: Single-User License	HP		Included in CLIN 0205AE
0487AB	MOTIF to C++ Bindings: Single-User License	HP		Included in CLIN 0205AF
0490AA	Graphics Software Development Package: Single-User License	Template, Thomson, HP	S1840A	$2,000
0490AB	Graphics Software Development Package: 1-5 Configuration License	Template, Thomson, HP	S1841A	$5,000
0490AC	Graphics Software Development Package: 1-10 Configuration License	Template, Thomson, HP	S1487A	$6,000
0510AA	National Imagery Transmission Format	VITec ELT	SW-TAC4	$2,000
0551AA	FDDI Single-Attached Station (EISA slot)	Interphase	CC04811-1115	$1,001
0551AC	FDDI Dual-Attached Station (EISA slot)	Interphase	CC04811-1114	$2,501

CLIN	Description	OEM or Supplier	Model #	Unit Price
♦0553AA	**EISA 100VG-AnyLAN (EISA slot)**	**HP**	**J2645AA, J2655AA #AAH**	**$773**
♦0554AA	**EISA X.25 Link (EISA slot)**	**HP**	**J2159A, J2159A #AAH, J2159A #1AU**	**$1,894**
♦0554AB	**Additional EISA X.25 Link**	**HP**	**J2159A, J2159A #1AU/1AW**	**$1,330**
0555AA	IEEE 802.3/Ethernet 10Base5 Interface	HP		NSP
0555AC	IEEE 802.3/Ethernet 10Base2 Interface	HP	S1845A	$101
0555AE	IEEE 802.3/Ethernet 10BaseT Twisted Pair Interface	HP		NSP
0555AG	IEEE 802.3/Ethernet 10BaseFP Interface	CODENOLL	CODENET-8380	
0555AJ	IEEE 802.3/Ethernet 10BaseFL Fiber Optic Interface	LANCAST	ENT 4322-1	$112
0555AL	OSI Protocol Suite	HP	S1857A	$201
0555AM	OSI Application Program Interfaces	HP		Included in CLIN 0555AL
0560AA	X.400 Special Purpose User Agent Development Package	HP	S1859A	$51
0560AB	X.400 Application Programmable Interface Package	HP		Included in CLIN 0560AA
0565AA	ISDN Basic Rate Interface	HP	S1861A	$51
0570AA	ATM Interface	HP	J2802A	$1,501
0575AA	SMTP/X.400 Gateway Functions	HP		Included in CLIN 0560AA
0575AB	FTP/FTAM Gateway Functions	HP	S1866A	$6
0580AA	IEEE 802.3/Ethernet to IEEE 802.3/Ethernet Repeater	Cabletron	MMAC-3, IRM-2	$2,044
0580AB	Repeater Tie-Down Kit	Harris	S1868A	$149
0583AA	Multiport Repeater	Cabletron	MMAC-8, M8FNB, IRM-2, M8PSM	$2,301
0583AB	Multiport Repeater Tie-Down Kit	Harris	3019240	$189
0583AC	IEEE 802.3 10BaseFL Card	Cabletron	FOMIN-26	$1,332
0583AD	IEEE 802.3 10Base5 Card	Cabletron	MT8-MIM	$486
0583AE	IEEE 802.3 10Base2 Card	Cabletron	THN-MIM	$721
0583AF	IEEE 802.3 10BaseT Card	Cabletron	TPMIM22	$757
0585AA	IEEE 802.3/Ethernet to FDDI Bridge	Harris	S1879A	$4,001
0585AB	Multiport Bridge/Router Tie-Down Kit	Bay Networks	BLN72000	$125

CLIN	Description	OEM or Supplier	Model #	Unit Price
0585AC	IEEE 802.3 10BaseFL Card	Bay Networks	74006-08	$4,516
0585AD	IEEE 802.3 10Base5 Card	Bay Networks	74006-08	$4,516
0585AE	IEEE 802.3 10Base2 Card	Bay Networks	74006-08	$4,516
0585AF	IEEE 802.3 10BaseT Card	Bay Networks	74006-08	$4,516
0585AG	ANSI X3T9.5 (FDDI)	Bay Networks	74006-08	$5,570
0590AA	Multi-Protocol (CLNP/IP) Router	Bay Networks	BLN71000	$15,001
0590AB	Multi-Protocol Router Tie-Down Kit	Harris	3019242	$239
0591AA	Blacker Router Interface	Bay Networks		Included in CLIN 0590AA
0592AA	DDN/MILNET/X.25 Router Interface	Bay Networks		Included in CLIN 0590AA
0593AA	Additional IEEE 802.3 10Base2 (ThinNet) Router Interface	Bay Networks	74007-08	$3,076
0594AA	Additional IEEE 802.3 10Base5 (ThickNet) Router Interface	Bay Networks	74007-08	$3,076
0595AA	FDDI Router Interface	Bay Networks	74011-08	$4,022
0596AA	High-Speed Serial Router Interface (HSSI)	Bay Networks	74001-08	$4,001
0598AA	Router Interface	ADA-Kentrox	15951	$3,478
0600AA	FDDI Concentrator	Interphase	CCWG800-1116	$3,348
0600AB	FDDI Concentrator Tie-Down Kit	Harris	3019243	$192
0601AB	Software Network Analyzer	HP	S1900A	$1,273
♦0601AC	**Hardware Network Analyzer – Ethernet Connection**	**HP**	**S4835A**	**$29,175**
♦0601AD	**Hardware Network Analyzer – FDDI Add-On**	**HP**	**J2524A, AMP 502122 3FSD**	**$17,437**
♦0601AE	**Hardware Network Analyzer – Remote Monitoring Add-On**	**HP**	**4986A, 4986A #ANB/OB4, 4988A, 4988A #001**	**$7,388**
0602AA	Commercial Interconnection Box	SAIC	72036-1	$163
0602AB	Commercial Interconnection Box Connector Shelf	SAIC	7037-1	$32
0602AC	Commercial Interconnection Box Splice Shelf	SAIC	BJ-1742C BEJED	$30
0602AD	Shipboard Small Interconnection Box	NMP	M24728/1-001	$532

CLIN	Description	OEM or Supplier	Model #	Unit Price
0602AE	Shipboard Large Interconnection Box	NMP	M24728/2-001	$853
0602AF	Shipboard Interconnection Box Connector Patch Panel	NMP	M24728/1-002	$89
0602AG	Shipboard Interconnection Box Splice Tray Kit	NMP	M24728/1-003	$70
0603AA	Commercial Fiber Optic Installation Connector Kit	SAIC	72038-1	$33
0603AB	Commercial Fiber Optic Installation Tool Kit	SAIC	72039-1	$1,621
0603AC	Shipboard Fiber Optic Installation Connector Kit	SAIC	72040-1	$2,328
0603AD	Shipboard Fiber Optic Installation Tool Kit	HP	S1915A	$1,621
0604AA	Commercial Bypass Switch	DiCon Fiberoptics	OBS-62-ST-S	$238
0604AB	Shipboard TCU	SAIC	72043-1	$1,073
0604AC	Shipboard TCU Tie-Down Kit	SAIC		Included in CLIN 0604AB
0605AA	25-Foot Fiber Optic Cable	Veritronics	F4AACP-25F	$116
0605AB	10-Foot Fiber Optic Cable	Veritronics	F4AACP-10F	$49
0605AC	Shipboard Fiber Optic Feeder Cable	Brand Rex	OC-1417	$2,838
0605AD	Shipboard Fiber Optic Cable Component	Brand Rex	OC-1418	$463
0605AE	Shipboard Fiber Optic Trunk Cable	Brand Rex	OC-1434	$4,808
0606AC	Micro F/O Transceiver with ST Connector	Lancast	Ent 4322-1	$111
0606AD	10Base FL Tie-Down Kit	SAIC	71614-1	$29
0609AB	Shipboard 10Base5 (ThickNet) LAN Installation Kit	SAIC	72018-1	$109
0609AC	10Base5 LAN Installation Tool Kit	SAIC	72019-1	$386
0609AE	Shipboard 10Base2 LAN Installation Kit	SAIC	72021-1	$62
0610AC	Shipboard 10Base5 (ThickNet) LAN Cable	Brand Rex	T14570	$626
0610AE	Shipboard 10Base2 (ThinNet) LAN Cable	Brand Rex	T14571	$223
0611AA	IEEE 802.3 Single-Port 10Base5 Transceiver	Allied Telesis	AT-206	$79
0611AB	10Base5 SP Transceiver Tie-Down Kit	SAIC	71615-1	$29
0611AC	IEEE 802.3 Four-Port 10Base5 Transceiver	Allied Telesis	AT-446	$132
0611AD	10Base5 Four-Port Transceiver Tie-Down Kit	SAIC	71616-1	$29
0611AE	IEEE 802.3/Ethernet Single-Port 10Base2 (ThinNet) Transceiver	SAIC	S1951A	$80
0611AF	10Base2 Single-Port Transceiver Tie-Down Kit	SAIC	71615-1	$29
0611AG	IEEE 802.3 Four-Port 10Base2 Transceiver	Allied Telesis	AT-444	$132
0611AH	10Base2 Four-Port Transceiver Tie-Down Kit	SAIC	71616-1	$29
0615AA	MIL-STD-1553B Interface *(Requires One EISA Slot)*	IL C Data Device	BUS-65529	$611
0615AC	IEEE 488 Interface *(Requires One EISA Slot)*	HP	E2071B, #001	$221
0615AE	SCSI Controller Module (SE-SCSI) *(Requires One EISA Slot)*	HP	A2679A	$122
0615AF	SCSI Controller Module (FW-SCSI) *(Requires One GSC Slot)*	HP	A4107A	$718

CLIN	Description	OEM or Supplier	Model #	Unit Price
0617AA	MIL-STD-1397 Interface Type B/A *(Requires One VME Slot)*	Visicom Labs	575-2000-001	$1,498
0617AB	MIL-STD-1397 Interface Type C *(Requires One VME Slot)*	Visicom Labs	575-2000-001	$2,001
0617AC	MIL-STD-1397 Interface Type H *(Requires One VME Slot)*	Visicom Labs	575-2000-010	$2,001
0617AE	Centronics Parallel Interface	HP		NSP
0617AF	MIL-STD-1397 Interface Type D *(Requires One VME Slot)*	Visicom Labs	575-2002-001	$1,577
0617AG	MIL-STD-1397 Interface Type E *(Requires One VME Slot)*	Visicom Labs	575-2005-001	$1,501
0617AH	RS-232-C Interface	HP		NSP
♦0617AJ	**MIL-STD-1397 Parallel Interface *(Requires One EISA Slot)***	**GET**	**10073501**	**$2,800**
♦0617AK	**MIL-STD-1397 Interface Type D *(Requires One EISA Slot)***	**GET**	**10078701**	**$2,800**
♦0617AL	**MIL-STD-1397 Interface Type E *(Requires One EISA Slot)***	**GET**	**10073801**	**$2,800**
0619AA	8-Channel Asynchronous Multiplexer *(Requires One VME Slot)*	Central Data	ST-1008+	$896
0619AB	Multiplexer Tie-Down Kit	Harris	3019244	$134
0619AC	16-Channel Asynchronous Multiplexer *(Requires One VME Slot)*	Central Data	ST-1016	$1,322
♦0619AD	**8-Port Serial Controller *(Requires One EISA Slot)***	**SBE**	**Super SEU-8**	**$1,100**
0626AA	OSI Network Manager Application	Harris	HNM	$14,000
0627AA	SNMP Network Manager Application	HP	J2317A #004, 008	$2,250
0653AA	Type 1 Cryptography-Based Secure Network Interface	Wang	YET-TIUI-T	$5,613
0653AB	Type 1 Cryptography-Based Secure Network Key Management System	Wang	YDE-KML	$5,498
0653AC	Type 1 Cryptography-Based Secure Network Blank Keys	Wang	YDE-SK4-B64	$128
0655AA	SCSI Bus Encryption System	Tracor	800-437790	$9,789
0655AB	SCSI Bus Key Management System	Tracor	800-000005	$5,136
0655AC	SCSI Bus Encryption Device Blank Keys	Tracor	82064B-64K	$106
0655AD	Serial Port Encryption Device	Allied Signal	4061222-0514	$5,047
0701AA	Maintenance Course	HP	S4211A	$500
0701AB	Operator's Course	HP	S1987A	$200
0701AC	Systems Administrator	HP	S1988A	$300
0701AD	Instructor Training	HP	S1989A	$300
0702AA	Maintenance Course (OCONUS)	HP	S4838A	$1,500
0702AB	Operator's Course (OCONUS)	HP	S4839A	$600
0702AC	Systems Administrator (OCONUS)	HP	S4840A	$600
0702AD	Instructor Training (OCONUS)	HP	S4841A	$600
0703AA	Processor Profiles A and C Development	HP	S1990A	$400
0703AB	Processor Profiles B and D Development	HP	S1991A	$400

CLIN	Description	OEM or Supplier	Model #	Unit Price
0703AC	Processor Profiles E and F Development	HP	S1992A	$400
0703AD	Processor Profile G Development	HP	S1993A	$400
0703AE	Processor Profile H Development	HP	S1994A	$400
0703AF	Secure Operating System	HP	S1995A	$400
0703AG	Graphics Development	HP	S1996A	$400
0703AH	Applications Development (Ada)	HP	S1997A	$400
0703AJ	Applications Development (COBOL)	HP	S1998A	$400
0703AK	Applications Development (FORTRAN)	HP	S1999A	$400
0703AL	Applications Development C	HP	S1404A	$400
0703AM	Applications Development C++	HP	S4338A	$400
0704AA	Processor Profiles A and C Development (OCONUS)	HP	S4339A	$800
0704AB	Processor Profiles B and D Development (OCONUS)	HP	S4340A	$800
0704AC	Processor Profiles E and F Development (OCONUS)	HP	S4341A	$800
0704AD	Processor Profile G Development (OCONUS)	HP	S4342A	$800
0704AE	Processor Profile H Development (OCONUS)	HP	S4343A	$800
0704AF	Secure Operating System (OCONUS)	HP	S4344A	$800
0704AG	Graphics Development (OCONUS)	HP	S4345A	$800
0704AH	Applications Development (ADA) (OCONUS)	HP	S4346A	$800
0704AJ	Applications Development (COBOL) (OCONUS)	HP	S4347A	$800
0704AK	Applications Development (FORTRAN (OCONUS)	HP	S4348A	$800
0704AL	Applications Development C (OCONUS)	HP	S4349A	$800
0704AM	Applications Development C++ (OCONUS)	HP	S4350A	$800
0705AA	Computer-Based Multimedia Training Material Package	HP	S1415A	$25
0751AA	On-Site Systems Analyst Support	HP	S1421A	$45/hr
0751AB	On-Site Systems Analyst Support Overtime	HP	S4303A	$70/hr
0751AC	On-Site Field Engineering Support	HP	S1426A	$45/hr
0751AD	On-Site Field Engineering Support Overtime	HP	S4304A	$70/hr
0751AE	Systems Engineering Support	HP	S1436A	$50/hr
0751AF	Systems Engineering Support Overtime	HP	S4305A	$70/hr
0752AA	On-Site Systems Analyst Support (OCONUS)	HP	S4306A	$53/hr
0752AB	On-Site Systems Analyst Support Overtime (OCONUS)	HP	S4307A	$70/hr
0752AC	On-Site Field Engineering Support (OCONUS)	HP	S4308A	$53/hr
0752AD	On-Site Field Engineering Support Overtime (OCONUS)	HP	S4309A	$70/hr
0752AE	Systems Engineering Support (OCONUS)	HP	S4442A	$75/hr
0752AF	Systems Engineering Support Overtime (OCONUS)	HP	S4443A	$70/hr
0753AA	Software Specialist	HP	S1441A	$73/hr
0753AB	Communications Specialist	HP	S1334A	$72/hr
0753AC	Security Specialist	HP	S1388A	$77/hr
0753AD	Hardware Specialist	HP	S1431A	$79/hr

CLIN	Description	OEM or Supplier	Model #	Unit Price
0753AE	Network Technician Support	HP	S5206A	$39/hr
0753AF	Network Technician Support Overtime	HP	S5207A	$60/hr
0754AA	Software Specialist (OCONUS)	HP	S4446A	$100/hr
0754AB	Communications Specialist (OCONUS)	HP	S4447A	$100/hr
0754AC	Security Specialist (OCONUS)	HP	S4448A	$100/hr
0754AD	Hardware Specialist (OCONUS)	HP	S4449A	$100/hr
0754AE	Network Technician Support (OCONUS)	HP	S5208A	$45/hr
0754AF	Network Technician Support Overtime (OCONUS)	HP	S5209A	$60/hr
♦0760AA	**HP Transition Services, Level 1**	**HP**	**S5163A**	**$15,900**
♦0760AB	**HP Transition Services, Level 2**	**HP**	**S5164A**	**$37,100**
♦0760AC	**HP Performance Implementation Assistance**	**HP**	**S5165A**	**$15,900**
♦0760AD	**HP Operations Center Implementation Assistance**	**HP**	**S5166A**	**$26,500**
♦0760AE	**HP MC/Service Guard Assistance**	**HP**	**S5167A**	**$31,800**
♦0760AF	**HP Network-Node Manager Implementation**	**HP**	**S5168A**	**$10,600**
♦0760AG	**HP Server System Implementation Jumpstart – Level 1**	**HP**	**S5169A**	**$26,500**
♦0760AH	**HP Server System Implementation Jumpstart – Level 2**	**HP**	**S5170A**	**$53,000**
♦0762AA	**HP Directed Supplemental – Based on 51413A**	**HP**	**S5171A**	**$120**
♦0762AB	**HP Technical Consultant – Based on 51414A**	**HP**	**S5172A**	**$192**
♦0762AC	**HP Consultant Specialist – Based on 51415A**	**HP**	**S5173A**	**$240**
♦0762AD	**HP Consultant Premium – Based on 51415P**	**HP**	**S5174A**	**$312**
0780AA	JTR Travel Costs	HP		$1
0781AA	Other Direct Charges	HP		$1
0782AA	Express Shipping	HP		$1
8001AA	0001AA High-Performance Rugged Rack-Mounted Dual-Monitor Console User Manuals	HP	S3366A	$10
8001DA	0001AA High-Performance Rugged Rack-Mounted Dual-Monitor Console Technical/Service Manuals	HP	S3367A	$10
8003AA	0003AA High-Performance Rugged Rack-Mounted Single-Monitor Console User Manuals	HP	S3368A	$10
8003DA	0003AA High-Performance Rugged Rack-Mounted Single-Monitor Console Technical/Service Manuals	HP	S3369A	$10
8005AA	0005AA Medium-Performance Rugged Rack-Mounted Single-Monitor Console User Manuals	HP	S3370A	$10
8005DA	0005AA Medium-Performance Rugged Rack-Mounted Single-Monitor Console Service/Technical Manuals	HP	S3371A	$10
8007AA	0007AA High-Performance Rugged Rack-Mounted Server User Manuals	HP	S3372A	$10
8007DA	0007AA High-Performance Rugged Rack-Mounted Server Technical/Service Manuals	HP	S3373A	$10
8009AA	0009AA Tactical Rugged Rack-Mounted Server/Workstation User Manuals	HP	S3374A	$10
8009DA	0009AA Tactical Rugged Rack-Mounted Server/Workstation Technical/Service Manuals	HP	S3375A	$10

CLIN	Description	OEM or Supplier	Model #	Unit Price
8013AA	0013AA High-Performance Desk-Mounted Single Monitor Workstation User Manuals	HP	S3378A	$10
8013DA	0013AA High-Performance Desk-Mounted Single Monitor Workstation Technical/Service Manuals	HP	S3379A	$10
8015AA	0015AA Medium-Performance Desk-Mounted Single Monitor Workstation User Manuals	HP	S3380A	$10
8015DA	0015AA Medium-Performance Desk-Mounted Single Monitor Workstation Technical/Service Manuals	HP	S3381A	$10
8017AA	0017AA High-Performance Desk-Mounted Server User Manuals	HP	S3382A	$10
8017DA	0017AA High-Performance Desk-Mounted Server Technical/Service Manuals	HP	S3383A	$10
8019AA	0019AA Low-Cost Workstation User Manuals	HP	S3384A	$10
8019DA	0019AA Low-Cost Workstation Technical/Service Manuals	HP	S3385A	$10
8020AA	User Technical Reference Manual	HP		$10
8023AA	0023AA Processor A User Manuals	HP	S3388A	$10
8023AB	0023AB and 0023AC RAM Expansion Manuals	HP	S3390A	$10
8023AD	0023AD PCMCIA Interface Manuals	HP	S3391A	$10
8023DA	0023AA High-Performance Rugged Rack-Mount Workstation/Server Technical/Service Manuals	HP	S3389A	$10
8025AA	0025AA Medium-Performance Rugged Rack-Mount Workstation/Server User Manuals	HP	S3392A	$10
8025AB	0025AB and 0025AC RAM Expansion Manuals	HP	S3675A	$10
8025AD	0025AD PCMCIA Interface Manuals	HP	S3676A	$10
8025DA	0025AA Medium-Performance Rugged Rack-Mount Workstation/Server Technical/Service Manuals	HP	S3393A	$10
8027AA	0027AA High-Performance Desktop Workstation/Server User Manuals	HP	S3394A	$10
8027AB	0027AB and 0027AC RAM Expansion Manuals	HP	S3677A	$10
8027AD	0027AD PCMCIA Interface Manuals	HP	S3396A	$10
8027AE	0027AE High-Performance Desktop Workstation/Server Tie-Down Kit Manuals	HP	S3678A	$10
8027DA	0027AA High-Performance Desktop Workstation/Server Technical/Service Manuals	HP	S3395A	$10
8029AA	0029AA Processor D User Manuals	HP	S3397A	$10
8029AB	0029AB and 0029AC RAM Expansion Manuals	HP	S3679A	$10
8029AD	0029AD PCMCIA Interface Manuals	HP	S3399A	$10
8029AE	0029AE Medium-Performance Desktop Workstation/Server Tie-Down Kit Manuals	HP	S3698A	$10
8029DA	0029AA Medium-Performance Desktop Workstation/Server Technical/Service Manuals	HP	S3398A	$10
8035AA	0035AA Low-Cost Desktop Workstation/Server User Manuals	HP	S3405A	$10
8035AB	0035AB, 0035AC, and 0035AD RAM Expansion Manuals	HP	S3407A	$10
8035AE	0035AE PCMCIA Interface Manuals	HP	S3408A	$10
8035AF	0035AF Low-Cost Desktop Workstation/Server Tie-Down Kit Manuals	HP	S3409A	$10

CLIN	Description	OEM or Supplier	Model #	Unit Price
8035DA	0035AA Low-Cost Desktop Workstation/Server Technical/Service Manuals	HP	S3406A	$10
8039AA	0039AA, 0039AB, 0039AC, 0039AD, 0039AE, 0039AF Rack Manuals	HP	S3414A	$10
8039AG	0039AA Removable I/O Power Panel Manuals	HP	S3413A	$10
8043AA	0043AA Power Distribution Unit (PDU) Manuals	HP	S3415A	$10
8043AB	0043AB Slide Out Rack Shelf Manuals	HP	S3417A	$10
8043AG	0043AG and 0043AH Console Cabinet Manuals	HP	S3470A	$10
8045AA	0045AA Rack-Mount Full Height Mass Storage Expansion Chassis Manuals	HP	S3418A	$10
8045AC	0045AC External Mass Storage Tie-Down Kit Manuals	HP	S3420A	$10
8047AA	0047AA 3.5" Internal Floppy Disk Drive Manuals (SCSI)	HP	S3421A	$10
8047AB	0047AB 3.5" Internal Floppy Disk Drive Manuals (IDE)	HP	S3422A	$10
8047AD	0047AD 5.25" Internal Floppy Disk Drive Manuals	HP	S3424A	$10
8047AE	0047AE 5.25" External Floppy Disk Drive Manuals	HP	S3432A	$10
8049AA	0049AA CD-ROM Internal Drive User Manuals	HP	S3425A	$10
8049AC	0049AC CD-ROM External Drive User Manuals	HP	S3428A	$10
8049AD	0049AD CD-ROM Caddy Manuals	HP	S3430A	$10
8049AE	0049AE CD-ROM Library Manuals	HP	S3431A	$10
8049DA	0049AA CD-ROM Internal Drive Technical/Service Manuals	HP	S3426A	$10
8049DC	0049AC CD-ROM External Drive Technical/Service Manuals	HP	S3429A	$10
8055AC	0055AC Medium-Capacity Internal Fixed Hard Disk Drive Manuals (SE-SCSI)	HP	S3451A	$10
8055AD	0055AD Medium-Capacity Internal Fixed Hard Disk Drive Manuals (FW-SCSI)	HP	S3452A	$10
8055AE	0055AE Medium-Capacity External Fixed Hard Disk Drive Manuals	HP	S3453A	$10
8055AF	0055AF High-Capacity Internal Fixed Hard Disk Drive Manuals (FW-SCSI)	HP	S3454A	$10
8055AG	0055AG High-Capacity External Fixed Hard Disk Drive Manuals	HP	S3466A	$10
8055AH	0055AH High-Capacity Internal Fixed Hard Disk Drive Manuals (SE-SCSI)	HP	S3468A	$10
8057AA	0057AA Multi-Drive Removable Hard Disk Drive Chassis (External Rack-Mount) Manuals	HP	S3455A	$10
8057AB	0057AB Removable Hard Disk Drive Manuals	HP	S3456A	$10
8057AC	0057AC Multi-Drive Removable Hard Disk Drive Chassis (External Desk-Mount) Manuals	HP	S3457A	$10
8059AA	0059AA RAID Fixed Hard Disk Array (External Rack-Mount) Manuals	HP	S3458A	$10
8059AB	0059AB RAID Array Hard Disk Drive Manuals (SE-SCSI)	HP	S3460A	$10
8059AC	0059AC RAID Fixed Hard Disk Drive Manuals (FW-SCSI)	HP	S3461A	$10
8059AD	0059AD RAID Fixed Hard Disk Array (External Desk-Mount) Manuals (FW-SCSI)	HP	S3459A	$10
8059AE	0059AE RAID Fixed Hard Disk Array (External Rack-Mount) Manuals (FW-SCSI)	HP	S3462A	$10
8059AF	0059AF RAID Fixed Hard Disk Array (External Desk-Mount) Manuals (SE-SCSI)	HP	S3464A	$10
8061AC	0061AC 2-GB DAT 4-mm Internal Tape Drive Manuals	HP	S3467A	$10

CLIN	Description	OEM or Supplier	Model #	Unit Price
8061AD	0061AD 2-GB DAT 4-mm External Tape Drive Manuals	HP	S3469A	$10
8061AE	0061AE 5-GB 8-mm Internal Tape Drive Manuals	HP	S3471A	$10
8061AF	0061AF 5-GB 8-mm External Tape Drive Manuals	HP	S3473A	$10
8063AA	0063AA Printer Type P1 User Manuals	HP	S3477A	$10
8063AB	0063AB Printer Type P1 Memory Expansion Manuals	HP	S3479A	$10
8063AC	0063AC Printer Type P2 User Manuals	HP	S3480A	$10
8063AD	0063AD Printer Type P2 Memory Expansion Manuals	HP	S3699A	$10
8063AG	0063AG Printer Type P4 User Manuals	HP	S3485A	$10
8063AH	0063AH Printer Type P4 Memory Expansion Manuals	HP	S3490A	$10
8063AJ	0063AJ Printer Type P5 User Manuals	HP	S3487A	$10
8063AK	0063AK Printer Type P5 Memory Expansion Manuals	HP	S3489A	$10
8063AL	0063AL Printer Type P6 User Manuals	HP	S3491A	$10
8063AP	0063AP Printer Tie-Down Kit Manuals	HP	S3496A	$10
8063AQ	0063AQ Printer Tie-Down Kit Manuals – Heavyweight	HP	S3700A	$10
8063AR	0063AR Network Printer Interface Manuals	HP	S3701A	$10
8063DA	0063AA Printer Type P1 Technical/Service Manuals	HP	S3478A	$10
8063DC	0063AC Printer Type P2 Technical/Service Manuals	HP	S3481A	$10
8063DG	0063AG Printer Type P4 Technical/Service Manuals	HP	S3486A	$10
8063DJ	0063AJ Printer Type P5 Technical/Service Manuals	HP	S3488A	$10
8063DL	0063AL Printer Type P6 Technical/Service Manuals	HP	S3492A	$10
8065AA	0065AA Keyboard Type KB1 Manuals – Rugged	HP	S3498A	$10
8065AB	0065AB Keyboard Type KB1 Manuals – Benign	HP	S3499A	$10
8067AA	0067AA Trackball Type TB1 Manuals	HP	S3500A	$10
8067AB	0067AB Trackball Type TB2 Manuals	HP	S3501A	$10
8067AC	0067AC Trackball Tie-Down Kit Manuals	HP	S3502A	$10
8067AD	0067AD Mouse and Pad Manuals	HP	S3503A	$10
8067AE	0067AE Trackball Type TB2 Manuals	HP	S3702A	$10
8069AA	0069AA HMI Selector Switch Manuals	HP	S3504A	$10
8069AB	0069AB Processor Selection Switch Manuals	HP	S3505A	$10
8075AA	0075AA Flat Panel Display/Input Device Manuals	HP	S3509A	$10
8075AB	0075AB Touch Sensitive Overlay for 19" Monitors Manuals	HP	S3510A	$10
8077AA	0077AA Headset with Microphone and Audio Module Manuals	HP	S3511A	$10
8079AA	0079AA 14" Pedestal-Mount Color Monitor Manuals	HP	S3512A	$10
8080AA	0080AA 17" Pedestal-Mount Color Monitor Manuals	HP		$10
8081AA	0081AA 19" Pedestal-Mount Color Monitor Manuals	HP	S3513A	$10
8081AB	0081AB 19" Rack-Mount Color Monitor Manuals	HP	S3514A	$10
8081AC	0081AC 25" Color Monitor Manuals	HP	S3515A	$10
8081AD	0081AD Ceiling Mount Kit for 15" Color Monitor Manuals	HP	S3516A	$10
8081AF	0081AF Large Screen Display Manuals	HP	S3518A	$10

CLIN	Description	OEM or Supplier	Model #	Unit Price
8081AG	0081AG Ruggedized Large Screen Display Manuals	HP	S3519A	$10
8081AH	0081AH RLSD Spare Parts Kit Manuals	HP	S3520A	$10
8081AJ	0081AJ Rear Projection Screen for Large Screen Display Manuals	HP	S3522A	$10
8081AK	0081AK Front Projection Screen for Large Screen Display Manuals	HP	S3523A	$10
8081AL	0081AL Ceiling Mount Kit for Large Screen Display Manuals	HP	S3524A	$10
8081AM	0081AM Rear Mount Kit for Large Screen Display Manuals	HP	S3525A	$10
8081AN	0081AN Color Flat Screen Display Manuals	HP	S3526A	$10
8081AP	0081AP Color Flat Screen Display Tie-Down Kit Manuals	HP	S3521A	$10
8083AF	0083AF Video Frame Grabber Manuals	HP	S3532A	$10
8083AG	0083AG Color Video Camera Manuals	HP	S3533A	$10
8083AJ	0083AJ X-Windows Terminal Manuals	HP	S3536A	$10
8085AC	0085AC RS-232 Line Driver Manuals	HP	S3538A	$10
8085AE	0085AE Centronics Line Driver Manuals	HP	S3540A	$10
8085AN	0085AN Video Distribution Amplifier Manuals	HP	S3549A	$10
8085AQ	0085AQ Video Linear Amplifier Manuals	HP	S3551A	$10
8087AA	0087AA Surge and Spike Protector (U.S. Power) Manuals, – Includes 0087AB Tie-Down Kit Manuals	HP	S3556A	$10
8087AC	0087AC Surge and Spike Protector (Overseas Power) Manuals, – Includes 0087AD Tie-Down Kit Manuals	HP	S3558A	$10
8087AE	0087AE Isolation Transformer (1 kVA) Manuals, – Includes 0087AF Tie-Down Kit Manuals	HP	S3560A	$10
8087AG	0087AG Isolation Transformer (3 kVA) Manuals, – Includes 0087AH Tie-Down Kit Manuals	HP	S3562A	$10
8087AL	0087AL Shipboard Power Conditioner Manuals, – Includes 0087AM Tie-Down Kit Manuals	HP	S3567A	$10
8087AN	0087AN Type U1 UPS Manuals	HP	S3569A	$10
8087AP	0087AP Tie-Down Kit for UPS Manuals	HP	S3570A	$10
8087AQ	0087AQ Type U2 UPS with Power Conditioner Manuals	HP	S3557A	$10
8087AR	0087AR Type U2 UPS Manuals	HP	S3571A	$10
8089AA	0089AA Type GU1 GUPS Manuals	HP	S3575A	$10
8091AA	0091AA Interactive Video Teleconferencing Information Exchange Subsystem Manuals	HP	S3579A	$10
8091AB	0091AB Single Output 2D Graphics Subsystem (G1) Manuals	HP	S3580A	$10
8091AC	0091AC Multiple Output 2D Graphics Subsystem (G2) Manuals	HP	S3581A	$10
8091AD	0091AD 3D Graphics Subsystem (G3) Manuals	HP	S3582A	$10
8200AC	Standard Operating System Manuals – Includes 0285AA and 0360AA Manuals	HP	S3589A	$10
8200AD	Secure Operating System Manuals	HP	S3590A	$10
8200AE	Real-Time Operating System Manuals	HP	S3591A	$10
8203AA	Real-Time Operating System Development Environment Manuals	HP	S3592A	$10
8205AA	C and Assembler SEE Manuals – Includes 0290AA, 0483AA, and 0485AA Manuals	HP	S3593A	$490
8210AA	C ++ SEE Manuals – Includes 0487AB Manuals	HP	S3594A	$10

CLIN	Description	OEM or Supplier	Model #	Unit Price
8215AA	FORTRAN SEE Manuals	HP	S3595A	$10
8220AA	Ada SEE Manuals – Includes 0487AA Manuals	HP	S3596A	$10
8225AA	COBOL SEE Manuals	HP	S3755A	$10
8335AA	Graphical User Interface (GUI) Builder for C Manuals	HP	S3737A	$10
8340AA	Graphical User Interface (GUI) Builder for C++ Manuals	HP	S3759A	$10
8350AA	Graphical User Interface (GUI) Builder for Ada Manuals	HP	S3607A	$10
8475AA	DOS Windowing Environment Manuals – Includes 0480AA Manuals	HP	S3621A	$10
8481AA	Graphics Bindings Manuals	HP	S3622A	$10
8490AA	Graphics Software Development Package Manuals	HP	S3623A	$10
8510AA	National Imagery Transmission Format Manuals	HP	S3624A	$10
8551AA	0551AA FDDI Single-Attached Station Manuals	HP	S3625A	$10
8551AC	0551AC FDDI Dual-Attached Station Manuals	HP	S3626A	$10
8555AA	0555AA IEEE 802.3/Ethernet 10Base5 Interface Manuals	HP	S3627A	$10
8555AC	0555AC IEEE 802.3/Ethernet 10Base2 Interface Manuals	HP	S3628A	$10
8555AG	0555AG IEEE 802.3/Ethernet 10BaseFP Interface Manuals	HP	S3629A	$10
8555AJ	0555AJ IEEE 802.3/Ethernet 10BaseFL Fiber Optic Interface Manuals	HP	S3630A	$10
8555AL	0555AL OSI Protocol Suite Manuals – Includes 0555AM Manuals	HP	S3631A	$10
8560AA	0560AA X.400 Special Purpose User Agent Development Manuals – Includes 0560AB and 0575AA Manuals	HP	S3632A	$10
8565AA	0565AA ISDN Basic Rate Interface Manuals	HP	S3633A	$10
8570AA	0570AA ATM Interface Manuals	HP	S3634A	$10
8575AB	0575AB FTP/FTAM Gateway Functions Manuals	HP	S3635A	$10
8580AA	0580AA IEEE 802.3/Ethernet to IEEE 802.3/Ethernet Repeater Manuals	HP	S3636A	$10
8580AB	0580AB Repeater Tie-Down Kit Manuals	HP	S3637A	$10
8583AA	0583AA Multiport Repeater Manuals	HP	S3638A	$10
8583AB	0583AB Tie-Down Kit for Multiport Repeater Manuals	HP	S3639A	$10
8583AC	0583AC IEEE 802.3 10BaseFL Card Manuals	HP	S3640A	$10
8583AD	0583AD IEEE 802.3 10Base 5 Manuals	HP	S3641A	$10
8583AE	0583AE IEEE 802.3 10Base2 Manuals	HP	S3642A	$10
8583AF	0583AF IEEE 802.3 10BaseT Manuals	HP	S3643A	$10
8585AA	0585AA IEEE 802.3/Ethernet to FDDI Bridge Manuals	HP	S3644A	$10
8585AB	0585AB Multiport Bridge/Router Tie-Down Kit Manuals	HP	S3645A	$10
8585AC	0585AC IEEE 802.3 10BaseFL Card Manuals	HP	S3646A	$10
8585AD	0585AD IEEE 802.3 10Base5 Manuals	HP	S3647A	$10
8585AE	0585AE IEEE 802.3 10Base2 Manuals	HP	S3648A	$10
8585AF	0585AF IEEE 802.3 10BaseT Manuals	HP	S3649A	$10
8585AG	0585AG ANSI X3T9.5 FDDI Manuals	HP	S3650A	$10
8590AA	0590AA Multi-Protocol Router Manuals – Includes 0591AA and 0592AA Manuals	HP	S3651A	$10
8590AB	0590AB Multi-Protocol Router Tie-Down Kit Manuals	HP	S3652A	$10

CLIN	Description	OEM or Supplier	Model #	Unit Price
8593AA	0593AA Additional ThinNet Router Interface Manuals	HP	S3653A	$10
8594AA	0594AA Additional ThickNet Router Interface Manuals	HP	S3654A	$10
8595AA	0595AA FDDI Router Interface Manuals	HP	S3655A	$10
8596AA	0596AA High-Speed Serial Router Interface Manuals	HP	S3656A	$10
8598AA	0598AA DS-3 Router Interface Manuals	HP	S3657A	$10
8600AA	0600AA FDDI Concentrator Manuals	HP	S3658A	$10
8600AB	0600AB FDDI Concentrator Tie-Down Kit Manuals	HP	S3659A	$10
8601AB	0601AB Software Network Analyzer Manuals	HP	S3661A	$10
8602AD	0602AD Shipboard Small Interconnection Box Manuals	HP	S3665A	$10
8602AE	0602AE Shipboard Large Interconnection Box Manuals	HP	S3666A	$10
8602AF	0602AF Shipboard Interconnection Box Connector Patch Panel Manuals	HP	S3667A	$10
8602AG	0602AG Shipboard Interconnection Box Splice Tray Kit Manuals	HP	S3668A	$10
8603AC	0603AC Shipboard Fiber Optic Installation Connector Kit Manuals	HP	S3671A	$10
8603AD	0603AD Shipboard Fiber Optic Installation Tool Kit Manuals	HP	S3672A	$10
8604AA	0604AA Commercial Bypass Switch Manuals	HP	S3674A	$10
8604AB	0604AB Shipboard TCU Manuals – Includes 0604AC Tie-Down Kit Manuals	HP	S3673A	$10
8606AC	0606AC Micro F/O Transceiver with ST Connector Manuals	HP	S3682A	$10
8606AD	0606AD 10BaseFL Tie-Down Kit Manuals	HP	S3683A	$10
8609AB	0609AB Shipboard 10Base5 LAN Installation Kit Manuals	HP	S3691A	$10
8609AC	0609AC 10Base5 LAN Installation Tool Kit Manuals	HP	S3692A	$10
8609AE	0609AE Shipboard 10Base2 LAN Installation Kit Manuals	HP	S3694A	$10
8611AA	0611AA Centrecom 206 10Base5 Transceiver Manuals	HP	S3703A	$10
8611AB	0611AB 10Base5 SP Transceiver Tie-Down Kit Manuals	HP	S3704A	$10
8611AC	0611AC Centrecom 446 Four Port 10Base5 Transceiver Manuals	HP	S3705A	$10
8611AD	0611AD 10Base4 4P Transceiver Tie-Down Kit Manuals	HP	S3706A	$10
8611AE	0611AE IEEE 802.3/Ethernet Single Port 10Base2 Transceiver Manuals	HP	S3707A	$10
8611AF	0611AF 10Base2 SP Transceiver Tie-Down Kit Manuals	HP	S3708A	$10
8611AG	0611AG Centrecom 444 Four Port 10Base5 Transceiver Manuals	HP	S3709A	$10
8611AH	0611AH 10Base2 4P Transceiver Tie-Down Kit Manuals	HP	S3710A	$10
8615AA	0615AA MIL-STD-1553B Manuals	HP	S3711A	$10
8615AC	0615AC IEEE 488 Manuals	HP	S3712A	$10
8615AE	0615AE SCSI Controller Module Manuals	HP	S3713A	$10
8617AA	0617AA MIL-STD-1397 Interface Type B Manuals	HP	S3714A	$10
8617AB	0617AB MIL-STD-1397 Interface Type C Manuals	HP	S3715A	$10
8617AC	0617AC MIL-STD-1397 Interface Type H Manuals	HP	S3716A	$10
8617AD	0617AD MIL-STD-1397 Interface Type A Manuals	HP	S3717A	$10
8617AF	0617AF MIL-STD-1397 Interface Type D Manuals	HP	S3718A	$10
8617AG	0617AG MIL-STD-1397 Interface Type E Manuals	HP	S3719A	$10
8617AJ	0617AJ, 0617AK, 0617AL MIL-STD-1397 Interface	HP	S3889A	$10

CLIN	Description	OEM or Supplier	Model #	Unit Price
8617AN	0617AN MIL-STD-1397 Interface	HP	S3890A	$10
8617AP	0617AP MIL-STD-1397 Interface	HP	S3891A	$10
8619AA	0619AA 8-Channel Asynchronous Multiplexer Manuals	HP	S3720A	$10
8619AB	0619AB Multiplexer Tie-Down Kit Manuals	HP	S3721A	$10
8619AC	0619AC 16-Channel Multiplexer Manuals	HP	S3722A	$10
8619AD	0619AD 8-Port EISA Bus Serial Controller Manuals	HP	S3888A	$10
8626AA	0626AA OSI Network Manager Application Manuals	HP	S3728A	$10
8627AA	0627AA SNMP Network Manager Application Manuals	HP	S3729A	$10
8653AA	0653AA Type 1 Cryptography-Based Secure Network Interface Manuals	HP	S3730A	$10
8653AB	0653AB Type 1 Cryptography-Based Secure Network Key Management System Manuals	HP	S3731A	$10
8653AC	0653AC Type 1 Cryptography-Based Secure Network Blank Keys Manuals	HP	S3732A	$10
8655AA	0655AA SCSI Bus Encryption System Manuals	HP	S3733A	$10
8655AB	0655AB SCSI Bus Key Management System Manuals	HP	S3734A	$10
8655AC	0655AC SCSI Bus Encryption Device Blank Keys Manuals	HP	S3735A	$10
8655AD	0655AD Embedded Serial Port Encryption Device Manuals	HP	S3736A	$10
8888AA	TAC-4 Cable Connection Reference Manual	HP	S3770A	$10

This page was intentionally left blank
for double-sided reproduction.

APPENDIX E
ENVIRONMENTAL SPECIFICATIONS

The products offered on the TAC-4 contract are designed to comply with the requirements of the environmental designations as specified in the TAC-4 contract and as described in the following table. In general, the HP Model J210- and 712-based workstations and servers meet the White environmental specifications; the HP Model J210XC workstations/servers, the Model C110 workstations, and the D- and K-Class servers meet the manufacturers' commercial specifications. All ruggedized, rack-mounted configurations that include these workstation/server processors meet the Red environmental requirements.

For more specific detail regarding the environmental specifications of any product or category, refer to the following tables or call the COTR, Doug Romig, at (619) 553-4086.

The environmental requirements, designated as color codes, are as follows:

Designation	Description
White	Benign office. Intended primarily for office or laboratory use.
Commercial	Commercial, benign office. Meets only the manufacturer's commercial environmental specifications.
Red	Shipboard and submarine combat situations where severe temperature and shock extremes are likely; mission critical.
Blue	Shipboard and submarine peacetime; not mission critical.
Gold	Transport. Intended primarily for transit cases that protect equipment in the non-operating state.
Green	Wheeled and tracked vehicle. Intended primarily for vehicles in combat and expeditionary situations.
Tan	Outdoors. Intended primarily for use in combat and expeditionary situations in an unsheltered, uncontrolled environment.

CLIN	Description	Environmental Code	H x W x D (in.)	Unit/Wgt (lb)	AC Volts	Watts	MTBF (hr)
0001AA	High-Performance Rugged Rack-Mounted Dual-Monitor Console	Red	71.86 x 24 x 36 (a)	778.5	115/230	875	10,260
0003AA	High-Performance Rugged Rack-Mounted Single-Monitor Console	Red	71.86 x 24 x 36 (a)	703.5	115/230	725	9,084
0005AA	Medium-Performance Rugged Rack-Mounted Single-Monitor Console	Red	59.86 x 24 x 36 (a)	666.5	115/230	725	9,246
0007AA	High-Performance Rugged Rack-Mounted Server	Red	71.86 x 24 x 36 (a)	688.5	115/230	800	13,233
0009AA	Tactical Rugged Rack-Mounted Server/Workstation	Green	40.36 x 24 x 36	505.0	85-265	550	10,616
0010AA	VME Portable Workstation Without LCD Display	Tan	12.0 x 17.5 x 14.0	53.0	90 – 132 AC/ 22 – 33 DC	250	3,000
0010AB	VME Portable Workstation With LCD Display (FW-SCSI)	Tan	12.0 x 17.5 x 14.0	53.0	90 – 132 AC/ 22 – 33 DC	250	3,000
0010AC	VME Portable Workstation With LCD Display (SE-SCSI)	Tan	12.0 x 17.5 x 14.0	53.0	90-132 AC/ 22-33 DC	250	3,000
0010AD	VME Portable Workstation External Color LCD Display Module	Tan	12.0 x 17.5 x 4.2	5.7			
0010AE	8-bit VME Graphics Controller	Tan	6U-VME Card				
0010AF	24-bit VME Graphics Controller	Tan	6U-VME Card				
0010AG	4-GB Removable Hard Disk Drive (SE-SCSI) for CLINs 0010AA, 0010AB, and 0010AC	Tan					
0010AH	4-GB Removable Hard Disk Drive (FW-SCSI) for CLINs 0010AA, 0010AB, and 0010AC	Tan					
0010AJ	8-Channel Asynchronous Multiplexer (MIL-STD-188) for CLINs 0010AB and 0010AC	Tan	6U-VME Card				
0010AK	Keyboard with Trackball for the VME Portable Workstations	Tan					
0010AL	Hard Transit Case for the VME Portable Workstations	Tan					
0013AA	High-Performance Desktop Single-Monitor Workstation	White	18.78 x 14 x 21.85 (b)	(max) 92.0	120/240	1000 (max)	9,941
0013AB	J210XC Workstation Bundle	Commercial	18.78 x 14 x 21.85 (b)	(max) 92.0	120/240	1000 (max)	9,941
0014AA	C110 Workstation Bundle	Commercial	5.44 x 21.24 x 17.6 (b)	47	120/240	525 (max)	
0015AA	Medium-Performance Desktop Single-Monitor Workstation	White	18.78 x 14 x 21.85 (b)	(max) 92.0	120/240	1000 (max)	10,136
0015AB	Medium-Performance 2-Way SMP Server (Model D350)	Commercial	24.2x10.4x22	82	120/240	690	
0015AC	Medium-Performance Server (Model K220)	Commercial	25.67x17.58x24.4	(max) 140	120/240		
0015AD	Enhanced Medium-Performance Server (Model K420)	Commercial	25.67x17.58x24.4	(max) 140	120/240		
0017AA	High-Performance Desktop Server	White	18.78 x 14 x 21.85 (b)	(max) 92.0	120/240	1000 (max)	15,136
0019AB	Low-Cost Workstation Bundle	White	2.75 x 15.95 x 14.56 (c)	(max) 18.4	120/240		11,932
0019AC	Low-Cost Workstation/Server Bundle	White	2.75 x 15.95 x 14.56 (c)	(max) 18.4	120/240		
0020AA	Low-Cost Desktop Workstation Bundle	White	2.75 x 15.95 x 14.56 (c)	(max) 18.4	120/240		11,932

CLIN	Description	Environmental Code	H x W x D (in.)	Unit/Wgt (lb)	AC Volts	Watts	MTBF (hr)
0021AF	Portable Workstation Bundle (64-MB RAM)	White					
0021AG	Portable Workstation Bundle (128-MB RAM)	White					
0023AA	High-Performance Rack-Mount Workstation/Server	Green, Red	15.75 x 19 x 28.3	105.0	120/240	1000 (max)	98,135
0023AB	RAM Expansion – 32-MB (for CLIN 0023AA)	White	2 SIMM Slots				522,000
0023AC	RAM Expansion – 128-MB (for CLIN 0023AA)	White	2 SIMM Slots				
0023AD	PCMCIA Interface (for CLIN 0023AA)	White	41 x 158 x 199 (mm)				
0025AA	Medium-Performance Rack-Mount Workstation/Server	Red, White	15.75 x 19 x 28.3	105.0			98,135
0025AB	RAM Expansion – 32-MB (for CLIN 0025AA)	White	2 SIMM Slots				522,000
0025AC	RAM Expansion – 128-MB (for CLIN 0025AA)	White	2 SIMM Slots				
0025AD	PCMCIA Interface (for CLIN 0025AA)	White	41 x 158 x 199 (mm)				
0027AA	High-Performance Desktop Workstation/Server (64-MB RAM)	White	18.78 x 14 x 21.85 (b)	(max) 92.0	120/240	1000 (max)	98,135
0027AB	RAM Expansion – 32-MB (for CLIN 0027AA)	White	2 SIMM Slots				522,000
0027AC	RAM Expansion – 128-MB (for CLIN 0027AA)	White	2 SIMM Slots				
0027AD	PCMCIA Interface (for CLIN 0027AA)	White					
0027AE	High-Performance Desktop Workstation/Server Tie-Down Kit (for CLIN 0027AA)	Blue					
0027AF	High-Performance Desktop Workstation/Server (128-MB RAM)	White	18.78 x 14 x 21.85 (b)	(max) 92.0	120/240	1000 (max)	98,135
0027AH	J210XC Workstation (64-MB RAM)	Commercial	18.7 x 14.1 x 20	(max) 92.0	120/240	1000 (max)	
0027AJ	J210XC Workstation (128-MB RAM)	Commercial	18.7 x 14.1 x 20	(max) 92.0	120/240	1000 (max)	
0028AA	C110 Workstation (32-MB RAM)	Commercial	5.44 x 21.24 x 17.6 (b)	47	120/240	525 (max)	
0028AB	C110 Workstation (128-MB RAM)	Commercial	5.44 x 21.24 x 17.6 (b)	47	120/240	525 (max)	
0028AC	RAM Expansion – 32-MB (for CLINs 0028AA and 0028AB)	Commercial	2 SIMM Slots				
0028AD	RAM Expansion – 128-MB (for CLINs 0028AA and 0028AB)	Commercial	2 SIMM Slots				
0028AE	1.44-MB Internal Floppy Drive (for CLINs 0028AA and 0028AB)	Commercial					
0028AF	Internal CD-ROM Drive (SE-SCSI) (for CLINs 0028AA and 0028AB)	Commercial					
0028AG	2-GB Internal Hard Disk Drive (FW-SCSI) (for CLINs 0028AA and 0028AB)	Commercial					
0028AH	4-GB Internal Hard Disk Drive (FW-SCSI) (for CLINs 0028AA and 0028AB)	Commercial					
0028AJ	4-GB 4-mm Internal DAT Drive (SE-SCSI) (for CLINs 0028AA and 0028AB)	Commercial					
0029AA	Medium-Performance Desktop Workstation (32-MB RAM)	White	18.78 x 14 x 21.85 (b)	(max) 92.0	120/240	1000 (max)	98,135
0029AB	RAM Expansion – 32-MB (for CLIN 0029AA)	White	2 SIMM Slots				522,000

CLIN	Description	Environmental Code	H x W x D (in.)	Unit/Wgt (lb)	AC Volts	Watts	MTBF (hr)
0029AC	RAM Expansion – 128-MB (for CLIN 0029AA)	White	2 SIMM Slots				
0029AD	PCMCIA Interface (for CLIN 0029AA)	White	41 x 158 x 199 (mm)				
0029AE	Medium-Performance Desktop Workstation Tie-Down Kit (for CLIN 0029AA)	White	4.25 x 12 x 16	15.0	110 – 120	100	11,000
0031AB	RAM Expansion – 8-MB (for CLIN 0031AH)	White	2 SIMM Slots				
0031AC	RAM Expansion – 16-MB (for CLIN 0031AH)	White	2 SIMM Slots				1,041,667
0031AD	RAM Expansion – 32-MB (for CLIN 0031AH)	White	2 SIMM Slots				
0031AF	Internal Fax Modem (for CLIN 0031AH)	White					
0031AH	Portable Workstation Bundle	Blue, White					
0031AJ	External UPS for Shore Power (with Soft Carry Case)	White					
0031AK	External UPS for Shore Power (with Soft Carry Case for both UPS and Workstation)	Commercial					
0031AL	DC-AC Power Converter for Vehicle Power	Blue, White					
0035AA	Low-Cost Desktop Workstation/Server – HP Model 712/80 with 16-MB RAM	White	2.75 x 15.95 x 14.56 (c)	18.4	120/240		98,135
0035AB	RAM Expansion – 8-MB (for CLINs 0035AA and 0036AA)	White	2 SIMM Slots				
0035AC	RAM Expansion – 16-MB (for CLINs 0035AA and 0036AA)	White	2 SIMM Slots				1,041,667
0035AD	RAM Expansion – 64-MB (for CLINs 0035AA and 0036AA)	White	2 SIMM Slots				
0035AE	PCMCIA Interface (for CLINs 0035AA and 0036AA)	White					
0035AF	Low-Cost Desktop Workstation/Server Tie-Down Kit (for CLIN 0035AA)	Blue					
0035AG	RAM Expansion – 32-MB (for CLINs 0035AA and 0036AA)	White	2 SIMM Slots				
0035AH	Low-Cost Desktop Workstation/Server – HP Model 712/80 with 32-MB RAM	White	2.75 x 15.95 x 14.56 (c)	18.4	90 – 132/ 98 – 264		
0035AJ	Low-Cost Desktop Workstation/Server – HP Model 712/80 with 64-MB RAM	White	2.75 x 15.95 x 14.56 (c)	18.4	90 – 132/ 98 – 264		
0036AA	Low-Cost Desktop Workstation/Server – HP Model 712/100 with No RAM Included in Base System	White	2.75 x 15.95 x 14.56 (c)	18.4	90 – 132/ 98 – 264		
0036AH	Second Serial Port (RS232-C) (for CLINs 0035AA and 0036AA)	White					
0036AJ	Second Serial Port (RS232-C) and LAN AUI Port (for CLINs 0035AA and 0036AA)	White					
0036AK	Second Serial Port (RS232-C) and X.25 Port (for CLINs 0035AA and 0036AA)	White					
0036AL	Second Monitor Port and Second LAN AUI Port (for CLINs 0035AA and 0036AA)	White	2.75 x 15.95 x 14.56 (c)	18.4	90 – 132/ 98 – 264		

CLIN	Description	Environmental Code	H x W x D (in.)	Unit/Wgt (lb)	AC Volts	Watts	MTBF (hr)
0036AM	Second Monitor Port – for Two Monitors Total (for CLINs 0035AA and 0036AA)	White	2.75 x 15.95 x 14.56 (c)	18.4	90 – 132/ 98 – 264		
0037AD	HP Model 743*i*/64 With On-Board 8-Plane Graphics	White	6U-VME Card				
0037AE	HP Model 743*i*/64 Without On-Board 8-Plane Graphics	White	6U-VME Card				
0037AF	HP Model 743*i*/100 With On-Board 8-Plane Graphics	White	6U-VME Card				
0037AG	HP Model 743*i*/100 Without On-Board 8-Plane Graphics	White	6U-VME Card				
0037AH	HP Model 748*i*/64 Integrated System With On-Board Graphics	White	12.22 x 16.75 x 16.24		90 – 132/ 180 – 250	1080 (max)	
0037AJ	HP Model 748*i*/64 Integrated System Without On-Board Graphics	White	12.22 x 16.75 x 16.24		90 – 132/ 180 – 250	1080 (max)	
0037AK	HP Model 748*i*/100 Integrated System With On-Board Graphics	White	12.22 x 16.75 x 16.24		90 – 132/ 180 – 250	1080 (max)	
0037AL	HP Model 748*i*/100 Integrated System Without On-Board Graphics	White	12.22 x 16.75 x 16.24		90 – 132/ 180 – 250	1080 (max)	
0037AM	RAM Expansion – 32-MB (for CLINs 0037AD–AL)	White	1 RAM Card				
0037AN	RAM Expansion – 64-MB (for CLINs 0037AD–AL)	White	1 RAM Card				
0037AP	8-Plane Color Graphics Mezzanine Card (for CLINs 0037AD–AL)	White	Mezzanine Card				
0037AQ	PCMCIA Adapter Mezzanine Card (for CLINs 0037AD–AL)	White	Mezzanine Card				
0037AS	Single-Channel VME Graphics Card (for CLINs 0037AD–AL)	White	6U-VME Card				
0037AT	Dual-Channel VME Graphics Card (for CLINs 0037AD–AL)	White	6U-VME Card				
0038AA	V743/100 VXI Embedded Controller Module (32-MB RAM)	Commercial					
0038AB	V743/100 VXI Embedded Controller Module (64-MB RAM)	Commercial					
0038AC	V743/100 VXI Embedded Controller Module (128-MB RAM)	Commercial					
0038AD	13-Slot C-Size High-Power VXI Mainframe	Commercial					
0038AE	VXI Analog-to-Digital Converter	Commercial					
0038AF	VXI 25.6KHz 8-Channel Digitizer Module	Commercial					
0038AG	VXI SCSI Disk Module	Commercial					
0038AH	VXI Data Disk/DAT/SCSI-2 Module	Commercial					
0038AJ	VXI Data Disk/SCSI-2 Module	Commercial					
0038AK	VXI Digital Signal Processor	Commercial					
0038AL	VXI System Disk (2.1-GB) with DAT Drive	Commercial					
0038AM	VXI 50-Ohm RF Multiplexer	Commercial					
0039AA	Rugged 72-Inch Rack (Rack Type R1)	Red	71.86 x 24 x 36	277.0			

CLIN	Description	Environmental Code	H x W x D (in.)	Unit/Wgt (lb)	AC Volts	Watts	MTBF (hr)
0043AA	Power Distribution Unit (PDU)	Red	3.5 x 19 x 11	15.0			
0043AB	Slide-Out Rack Shelf	Green, Red	3.5 x 19 x 23.5				
0045AA	Rack-Mount Full-Height Mass Storage Expansion Chassis	Green, Red	7 x 19 x 18	50.0	115/230		
0047AA	3.5-Inch Floppy Disk Drive – Internal (SE-SCSI)	White					300,000 (d)
0047AB	3.5-Inch Floppy Disk Drive – Internal (PC Style)	White					300,000 (d)
0047AD	5.25-Inch Floppy Disk Drive – Internal (SE-SCSI)	White					20,000 (d)
0047AE	5.25-Inch Floppy Disk Drive – External (SE-SCSI)	White	2.5 x 6.7 x 8.5	9.0			20,000 (d)
0049AA	CD-ROM Drive – Internal (SE-SCSI)	White					
0049AC	CD-ROM Drive – External (SE-SCSI)	White	2.5 x 6.7 x 8.5				50,000 (e)
0049AD	CD-ROM Caddy	White		9.4			50,000 (e)
0049AE	CD-ROM Library (SE-SCSI)	Blue	7 x 17 x 29.5	52.0	100/240		
0055AC	Medium-Capacity (1-GB) Fixed Hard Disk Drive – Internal (SE-SCSI)	White					500,000
0055AD	Medium-Capacity (1-GB) Fixed Hard Disk Drive – Internal (FW-SCSI)	White					500,000
0055AE	Medium-Capacity (1-GB) Fixed Hard Disk Drive – External (SE-SCSI)	White	2.5 x 6.7 x 8.7	3.8			500,000
0055AF	High-Capacity (2-GB) Fixed Hard Disk Drive – Internal (FW-SCSI)	White					500,000
0055AG	High-Capacity (2-GB) Fixed Hard Disk Drive – External (SE-SCSI)	White	2.5 x 6.7 x 8.5				
0055AH	High-Capacity (2-GB) Fixed Hard Disk Drive – Internal (SE-SCSI)	White					
0055AN	4-GB Fixed Hard Disk Drive – Internal (FW-SCSI)	Commercial					
0055AP	4-GB Fixed Hard Disk Drive – External (SE-SCSI)	Commercial (g)	2.5 x 6.7 x 8.5	5.0	100/240		500,000
0055AQ	4-GB Fixed Hard Disk Drive – External (FW-SCSI)	Commercial (g)	2.5 x 6.7 x 8.5	5.0	100/240		
0057AA	Multi-Drive Removable Hard Disk Drive Chassis – External Rack-Mount (SE-SCSI)	Red	3.5 x 19 x 18	30.0	115/230	200	80,000
0057AB	Removable Hard Disk Drive	White	2 x 4.6 x 8.5	3.0			80,000
0057AC	Multi-Drive Removable Hard Disk Drive Chassis – External Desk-Mount (SE-SCSI)	White	6.38 x 7 x 16.25	12.0	115/230	200	50,000 (e)
0059AA	RAID Fixed Hard Disk Array – External Rack-Mount (SE-SCSI)	Red	7 x 19 x 22	42.0	115/230	300	150,000 (e)
0059AB	RAID Array Hard Disk Drive (SE-SCSI)	White	2 x 4.6 x 8.5	3.0			80,000
0059AD	RAID Fixed Hard Disk Array – External Desk-Mount (FW-SCSI)	White	7 x 17 x 22	42.0	115/230	300	
0059AE	RAID Fixed Hard Disk Array – External Rack-Mount (FW-SCSI)	Red					
0059AF	RAID Fixed Hard Disk Array – External Desk-Mount (SE-SCSI)	White					
0060AA	High-Availability Storage Enclosure – Deskside	Commercial	16.15 x 12.21 x 12.61	75.0	90 – 140	250	33,500

CLIN	Description	Environmental Code	H x W x D (in.)	Unit/Wgt (lb)	AC Volts	Watts	MTBF (hr)
0060AB	High-Availability Storage Enclosure – Commercial Rack-Mount	Commercial	10.36 x 16.75 x 10.44	75.0	90 – 140	250	33,500
0060AC	Hot-Pluggable Power Supply Module	Commercial					
0060AD	Hot-Pluggable Fan Module	Commercial					
0060AE	2.1-GB LP High-Performance Disk Module (SE-SCSI) (for CLINs 0130AA and 0130AB)	Commercial	1.44 x 4.72 x 9.45	2.5			800,000
0060AF	2.1-GB LP High-Performance Disk Module (FW-SCSI) (for CLINs 0130AA and 0130AB)	Commercial	1.44 x 4.72 x 9.45	2.5			800,000
0060AG	4.3-GB LP High-Performance Disk Module (SE-SCSI) (for CLINs 0130AA and 0130AB)	Commercial	2.91 x 4.72 x 9.45	3.5			800,000
0060AH	4.3-GB LP High-Performance Disk Module (FW-SCSI) (for CLINs 0130AA and 0130AB)	Commercial	2.91 x 4.72 x 9.45	3.5			800,000
0060AJ	4-GB DDS-2 DAT Drive Module (SE-SCSI) (for CLINs 0130AA and 0130AB)	Commercial					200/12% duty cycle
0060AK	Single SCSI Bus Configuration Cable	Commercial					
0060AL	1-Meter SE-SCSI Cable Kit (for CLINs 0130AA and 0130AB)	White					
0060AM	2-Meter SE-SCSI Cable Kit (for CLINs 0130AA and 0130AB)	White					
0061AC	2-GB DAT 4-mm Tape Drive – Internal (SE-SCSI)	White					500,000(d)
0061AD	2-GB DAT 4-mmTape Drive – External (SE-SCSI)	White	2.5 x 6.7 x 8.7				500,000(d)
0061AE	5-GB 8-mm Tape Drive – Internal (SE-SCSI)	White					80,000 (d)
0061AF	5-GB 8-mm Tape Drive – External (SE-SCSI)	White	2.5 x 6.7 x 8.7	2.6	100/240		80,000 (d)
0063AA	LaserJet 4 Plus (Printer Type P1)	White	16.4 x 15.9 x 11.7	37	110/220	300	
0063AB	Memory Expansion (1-MB) (for CLIN 0063AA)	White	1 SIMM Slot				
0063AC	LaserJet 4Si (Printer Type P2)	White	16.5 x 21.5 x 23.5	94	110/220	1100	
0063AD	Memory Expansion (1-MB) (for CLIN 0063AC)	White	1 SIMM Slot				
0063AG	DeskJet 1200C (Printer Type P4)	White	11.25 x 19 x 17.5	27.0	110/220	250	10,000
0063AH	Memory Expansion (1-MB) (for CLIN 0063AG)	White	1 SIMM Slot				
0063AJ	DeskJet 1200C (Printer Type P5)	White	11.25 x 19 x 17.5	27.0	110/220	180	10,000
0063AK	Memory Expansion (1-MB) (for CLIN 0063AJ)	White	1 SIMM Slot				
0063AL	Mannesman Tally Dot-Matrix Printer (Printer Type P6)	White	456 x 141 x 336 (mm)	25.7	110/220		10,000 (f)
0063AR	Network Printer Interface	White	2.5 x 9.5 x 11	3.0			
0063AS	RAM Expansion – 8-MB (for CLIN 0063AA)	White	1 SIMM Slot				
0063AT	RAM Expansion – 16-MB (for CLIN 0063AA)	White	1 SIMM Slot				
0063AU	RAM Expansion – 8-MB (for CLIN 0063AD)	White	1 SIMM Slot				

CLIN	Description	Environmental Code	H x W x D (in.)	Unit/Wgt (lb)	AC Volts	Watts	MTBF (hr)
0063AV	RAM Expansion – 8-MB (for CLIN 0063AG)	White	1 SIMM Slot				
0063AW	RAM Expansion – 8-MB (for CLIN 0063AJ)	White	1 SIMM Slot				
0065AA	Keyboard Type KB1 for Rack Bullnose	Blue, Red	5.77 x 12.75 x 1.4				60,000
0065AB	Keyboard Type KB1 (Benign)	White	18 x 7 x 1.5 to 2.2	3.4			
0065AD	Interface for 2nd HMI Ports (PS/2 Keyboard and Trackball)	White					
0065AE	Keyboard Type KB1 with Tie-Down Kit	Blue, White					
0067AA	Trackball Type TB1 (Rugged)	Blue, Red					25,000
0067AB	Trackball Type TB2 (Benign – Penny and Giles)	White	60 x 124 x 202 (mm)				50,000
0067AD	Mouse and Pad	White					150,000
0067AE	Trackball Type TB2 (Benign – Evergreen)	White	1.7 x 4 x 8	1.0			25,000
0069AA	HMI Selection Switch	Red	2 x 7 x 5				
0069AB	Processor Selection Switch	Red	7.4 x 1.3 x 3.7				
0075AA	Flat-Panel Display/Input Device	Red		7.0			
0075AB	Touch-Sensitive Overlay for 19-Inch Monitor	Red					67,750
0077AA	Headset with Microphone and Audio Module (with Rack Plug Connector)	Red					
0077AB	Headset with Microphone and Audio Module (with 3.5-mm Plug Connector)	White					
0079AA	14-Inch Pedestal-Mount Color Monitor	White	14.4 x 13.9 x 15.8	31.0	88 – 135/ 193 – 269	75	40,000
0080AA	17-Inch Pedestal-Mount Color Monitor	White	16.3 x 15.98 x 17.71	48.4	90 – 132/ 195 – 264	120	
0081AA	19-Inch Pedestal-Mount Color Monitor	White	18.7 x 18.7x 19.8	66.1	90 – 132/ 195 – 264	120	
0081AB	19-Inch Rack-Mount Color Monitor	Red	15.75 x 19.0 x 21.75 (Cabinet Dimensions)	91.0		120	39,635
0081AJ	Rear Projection Screen for Large Screen Display						
0081AK	Front Projection Screen for Large Screen Display						
0081AL	Ruggedized Ceiling Mount Kit for Large Screen Display	Red					
0081AM	Rear Mount Kit for Large Screen Display						
0081AN	Color Flat Screen Display	Blue		7.0			
0081AQ	Shielded Large Screen Display	White	11.6x25.5x39.9	120	110/220		
0083AF	Video Frame Grabber	White					

CLIN	Description	Environmental Code	H x W x D (in.)	Unit/Wgt (lb)	AC Volts	Watts	MTBF (hr)
0083AG	Color Video Camera	White	1.26 x 1.65 x 5.24	7.3 oz.			
0083AJ	X-Windows Terminal	White	21.5 x 19.7 x 29.9 (monitor & base)	88.1			
0083AM	Memory Expansion – 8-MB (for CLIN 0083AJ)	White	2 SIMM Slots				
0083AN	Memory Expansion – 16-MB (for CLIN 0083AJ)	White	2 SIMM Slots				
0083AP	Memory Expansion – 32-MB (for CLIN 0083AJ)	White	2 SIMM Slots				
0085AC	RS-232 Line Driver	White					
0085AE	Centronics Line Driver	White					
0085AN	Video Distribution Amplifier	White					
0085AQ	Video Linear Amplifier	White					
0086AA	VME Expansion Chassis	Commercial	14 x 16.63 x 18			350	
0086AB	VME Expansion Chassis Rack Mounting Kit (for CLIN 0086AA)	Commercial					
0086AC	EISA-to-VME Bridge Subsystem	White	4.0 x 7.5 x 3.2	4.0	120/220		
0086AD	EISA-to-VME Bridge Subsystem – Low Smoke Cable	Red	4.13 x 1.75 x 2.75	1.0			
0087AA	Surge and Spike Protector (U.S. Power)	Blue	2 x 2.5 x 11.5	3.0			
0087AC	Surge and Spike Protector (Overseas Power)	Blue	2 x 2.5 x 21.5	4.5			
0087AE	Isolation Transformer (1 kVA)	Red	6.5 x 8.5 x 9.75	35.0			
0087AG	Isolation Transformer (3 kVA)	Red	6.5 x 8.5 x 12.25	63.0			
0087AL	Shipboard Power Conditioner	Red	Included in 0087AE, AG, AJ				
0087AN	Type U1 UPS (2 kVA)	Red	18 x 6.9 x 17.8	100.0	120/240		
0087AQ	Type U2 UPS with Power Conditioner (2 kVA)	Red					
0087AR	Type U2 UPS (2 kVA)	Red					
0088AB	Uninterruptible Power Supply (1.3 kVA) – Commercial Rack Mount	Commercial					
0088AC	Uninterruptible Power Supply (1.8 kVA) – Commercial Rack Mount	Commercial					
0088AD	Uninterruptible Power Supply (3.0 kVA) – Commercial Rack Mount	Commercial	5 x 17 x 24 (battery box) 10 x 17 x 24 (electrical unit)	434.5 (shipping wgt.)	180 – 256	3	
0088AE	Uninterruptible Power Supply (0.6 kVA) – Commercial Floor Standing	Commercial	5.25 x 19 x 28	180.0	84 – 260 select.		
0088AF	Uninterruptible Power Supply (1.3 kVA) – Commercial Floor Standing	Commercial	5.25 x 19 x 28		84 – 260 select.		
0089AA	Type GU1 GUPS (1.25 kVA)	White	7 x 19 x 21	100.0	80 – 280	1000	75,000

CLIN	Description	Environmental Code	H x W x D (in.)	Unit/Wgt (lb)	AC Volts	Watts	MTBF (hr)
0091AA	Interactive Video Telecommunications Information Exchange Subsystem	White					
0091AB	Single-Output 2D Graphics Subsystem (G1)	White	1 GSC Slot				483,000
0091AC	Multiple-Output 2D Graphics Subsystem (G2)	White	1 GSC Slot				474,000
0091AD	3D Graphics Subsystem (G3)	White	1 GSC Slot + 1 External Unit (17.5 x 12.75 x 4)	20.0			
0091AE	Color Graphics Subsystem	Commercial					
0092AB	Visualize-8 Graphics Subsystem	Commercial	1 GSC Slot				
0092AC	Visualize-24 Graphics Subsystem	Commercial	2 GSC Slots				
0092AD	Visualize-8 and -24 Video Output Option	Commercial	2 GSC Slots				
0092AE	Visualize-48 Graphics Subsystem	Commercial	3 GSC Slots				
0092AF	Visualize-48 Graphics Subsystem with 16-MB Texture Map Memory Option	Commercial	3 GSC Slots				
0092AG	Visualize-48 Graphics Subsystem with Video Output Option	Commercial	3 GSC Slots				
0092AH	Visualize-48 Graphics Subsystem with 16-MB Texture Map Memory and Video Output Options	Commercial	3 GSC Slots				
0093CA	Transit Case for the SAIC Talon Rugged Portable Workstation						
0093CB	Transit Case for the SAIC Rugged Expansion Chassis						
0093CD	Transit Case with Concentric Foam (for CLINs 0027AA, 0029AA, 0063AA, 0063AG, 0063AJ, 0079AA)	Commercial	26 x 24 x 23				
0093CE	Transit Case with Concentric Foam (for CLINs 0063AC, 0081AA, and 0083AJ	Commercial	32 x 32 x 26				
0093CF	Transit Case with Concentric Foam (for CLINs 0049AE, 0059AD, and 0063AL, 0087AQ, and 0089AA	Commercial	34 x 28 x 14				
0093CG	Transit Case with Concentric Foam (for CLIN 0087AN)	Commercial	34 x 28 x 18				
0093CH	Transit Case with Concentric Foam (for CLINs 0067AA, 0067AB, and 0067AD)	Commercial	10 x 10 x 14				
0093CJ	Transit Case with Concentric Foam (for CLINs 0047AE, 0049AC, 0055AE, 0055AG, 0061AD, 0065AA, 0087AA, and 0087AE)	Commercial	20 x 17 x 13				
0093CK	Transit Case with Concentric Foam (for CLINs 0035AA, 0057AC, and 0081AN, and 0087AG)	Commercial	26 x 24 x 17				
0125AA	HP Model D350 2-Way SMP Server System	Commercial	24.2 x 10.4 x 22	82	110/240	690	
0125AB	Expansion RAM – 32-MB (for CLIN 0125AA)	Commercial	2 SIMM Slots				

CLIN	Description	Environmental Code	H x W x D (in.)	Unit/Wgt (lb)	AC Volts	Watts	MTBF (hr)
0125AC	Expansion RAM – 128-MB (for CLIN 0125AA)	Commercial	2 SIMM Slots				
0125AD	2-GB Hot-Pluggable Disk Drive with Canister (FW-SCSI) (for CLIN 0125AA)	Commercial					
0125AF	4-GB DDS DAT Drive – Internal (SE-SCSI) (for CLIN 0125AA)	Commercial					
0125AG	8-Port MUX Card with Cabling (for CLIN 0125AA)	Commercial					
0125AH	64-Port MUX Card with Cabling (for CLIN 0125AA)	Commercial					
0125AJ	16-Port Module (RJ45) (for CLIN 0125AA)	Commercial					
0125AK	16-Port Module (DB25) (for CLIN 0125AA)	Commercial					
0125AL	Console Terminal (for CLIN 0125AA)	Commercial					
0130AA	HP Model K220 System	Commercial	25.24 x 17.3 x 24.01	115-140	100-240	1250	
0130AB	HP Model K420 System	Commercial	25.24 x 17.3 x 24.01	115-140	100-240	1250	
0130AC	K-Series Processor (120 MHz) Module with 2-MB Cache Memory (for CLINs 0130AA and 0130AB)	Commercial					
0130AD	Expansion RAM – 32-MB (for CLINs 0130AA and 0130AB)	Commercial	2 SIMM Slots				
0130AE	Expansion RAM – 128-MB (for CLINs 0130AA and 0130AB)	Commercial	2 SIMM Slots				
0130AF	Expansion RAM – Additional Memory Carrier (for CLINs 0130AA and 0130AB)	Commercial					
0130AG	2-GB Hard Disk Drive (FW-SCSI) Add-On (for CLINs 0130AA and 0130AB)	Commercial					
0130AH	4-GB Hard Disk Drive (FW-SCSI) Add-On (for CLINs 0130AA and 0130AB)	Commercial					
0130AJ	2D Graphics Card (for CLINs 0130AA and 0130AB)	Commercial					
0130AK	FW SCSI Card (for CLINs 0130AA and 0130AB)	Commercial					
0130AL	Ethernet – ThinLAN/9000 Interface (HP-PB) (for CLINs 0130AA and 0130AB)	Commercial					
0130AM	FDDI (for CLINs 0130AA and 0130AB)	Commercial					
0130AN	16-Port (RJ45) RS-232 MUX (HP-PB) (for CLINs 0130AA and 0130AB)	Commercial					
0130AP	16-Port (DB25) RS-232 MUX (HP-PB) (for CLINs 0130AA and 0130AB)	Commercial					
0130AQ	16-Port (RJ45) RS-423 MUX (HP-PB) (for CLINs 0130AA and 0130AB)	Commercial					
0130AR	16-Port (DB25) RS-423 MUX (HP-PB) (for CLINs 0130AA and 0130AB)	Commercial					

CLIN	Description	Environmental Code	H x W x D (in.)	Unit/Wgt (lb)	AC Volts	Watts	MTBF (hr)
0130AS	16-Port RS-232 MUX Modem (HP-PB) (for CLINs 0130AA and 0130AB)	Commercial					
0130AT	32-Port (RJ45) RS-232 MUX (HP-PB) (for CLINs 0130AA and 0130AB)	Commercial					
0130AU	32-Port (DB25) RS-232 MUX (HP-PB) (for CLINs 0130AA and 0130AB)	Commercial					
0135AA	1.6-Meter Commercial Rack (100/120V)	Commercial					
0135AB	Rack-Mount Kit for D-Series Servers (CLINs 0015AB and 0125AA) for the 1.6-Meter Commercial Rack (CLIN 0135AA)	Commercial					
0135AC	Rack-Mount Kit for K-Series Servers (CLINs 0015AC, 0015AD, 0130AA, and 0130AB) for the 1.6-Meter Commercial Rack (CLIN 0135AA)	Commercial					
0135AD	Filler Panel Kit for the 1.6-Meter Commercial Rack (CLIN 0135AA)	Commercial					
0135AE	Lockable Front Door for the 1.6-Meter Commercial Rack (CLIN 0135AA)	Commercial					
0135AF	Rack Tie-Together Kit for the 1.6-Meter Commercial Rack (CLIN 0135AA)	Commercial					
0135AG	Add-on PDU for the 1.6-Meter Commercial Rack (CLIN 0135AA)	Commercial					
0195AA	HP 501 Windows Application Server	Commercial					
0195AB	HP 502 Windows Application Server	Commercial					
0195AC	RAM Expansion -16-MB (for CLINs 0195AA and 0195AB)	Commercial	2 SIMM Slots				
0195AD	RAM Expansion – 32-MB (for CLINs 0195AA and 0195AB)	Commercial	2 SIMM Slots				
0553AA	EISA 100VG-AnyLAN	Commercial	1 EISA Slot				
0554AA	EISA X.25 Link	Commercial	1 EISA Slot				
0554AB	Additional EISA X.25 Link	Commercial	1 EISA Slot				
0601AC	Network Hardware Analyzer – Ethernet Connector	Commercial					
0601AD	Network Hardware Analyzer – FDDI Add-On	Commercial					
0601AE	Network Hardware Analyzer – Remote Monitoring Add-On	Commercial					
0615AA	MIL-STD-1553B Interface	White	1 EISA Slot				
0615AC	IEEE 488 Interface	White	1 EISA Slot				
0615AE	SCSI Controller Module (SE-SCSI)	White	1 EISA Slot				
0615AF	SCSI Controller Module (FW-SCSI)	White	1 GSC Slot				
0617AJ	MIL-STD-1397 Parallel Interface	Commercial	1 EISA Slot				
0617AK	MIL-STD-1397 Interface Type D	Commercial	1 EISA Slot				

CLIN	Description	Environmental Code	H x W x D (in.)	Unit/Wgt (lb)	AC Volts	Watts	MTBF (hr)
0617AL	MIL-STD-1397 Interface Type E	Commercial	1 EISA Slot				
0619AA	8-Channel Asynchronous MUX	White	6U-VME Slot				
0619AC	16-Channel Asynchronous MUX	White	6U-VME Slot				
0619AD	8-Port Serial Controller	Commercial	1 EISA Slot				

Notes:

(a) *Without bullnose*
(b) *Workstation only*
(c) *Without monitor*
(d) *Assumes 10% duty cycle*
(e) *Power-on hours*
(f) *Assumes 25% duty cycle*
(g) *Limits operating environment to 35 degrees*

This page was intentionally left blank
for double-sided reproduction.

APPENDIX F
RACK DRAWINGS

This section contains detailed drawings of the rugged, rack-mounted workstations and servers. For each CLIN, the drawings include an illustration that depicts the primary components, and two detailed rack assembly drawings, which indicate specific measurements and locations of the components within the rack.

The following CLINs are detailed on subsequent pages:

Workstations	*CLIN*	*PAGE*
■ High-Performance Rugged Rack-Mounted Dual-Monitor Console	0001AA	F-3
■ High-Performance Rugged Rack-Mounted Single-Monitor Console	0003AA	F-7
■ Medium-Performance Rugged Rack-Mounted Single-Monitor Console	0005AA	F-11
Servers		
■ High-Performance Rugged Rack-Mounted Server	0007AA	F-15
■ Tactical Rugged Rack-Mounted Workstation/Server	0009AA	F-19

Rack Configuration

The vertical height (in U units) of TAC-4 rack-mountable components are indicated below:

CLIN	Description	Vertical Height (U Units)
0023AA	High-Performance Rack-Mount Workstation/Server	9
0025AA	Medium-Performance Rack-Mount Workstation/Server	9
0043AA	Power Distribution Unit (PDU)	2
0043AB	Slide-Out Rack Shelf	2
0057AA	Multi-drive Removable Hard Disk Drive	4
0059AA	RAID Fixed Hard Disk Array (SE-SCSI)	4
0059AE	RAID Fixed Hard Disk Array (FW-SCSI)	4
0081AB	19-inch Rack-Mount Color Monitor	9
0086AA	VME Expansion Chassis	8
0087AQ	Type U2 UPS with Power Conditioner (2 kVA)	3
0087AR	Type U2 UPS (2 kVA)	3
0089AA	Type GU1 GIPS	4
0089AC	Type GU2 GIPS	4

For additional information regarding specific rack measurements or configurations, call the TAC-4 Help Desk at 1-800-203-TAC4.

High-Performance Rugged Rack-Mounted Dual-Monitor Console
CLIN 0001AA

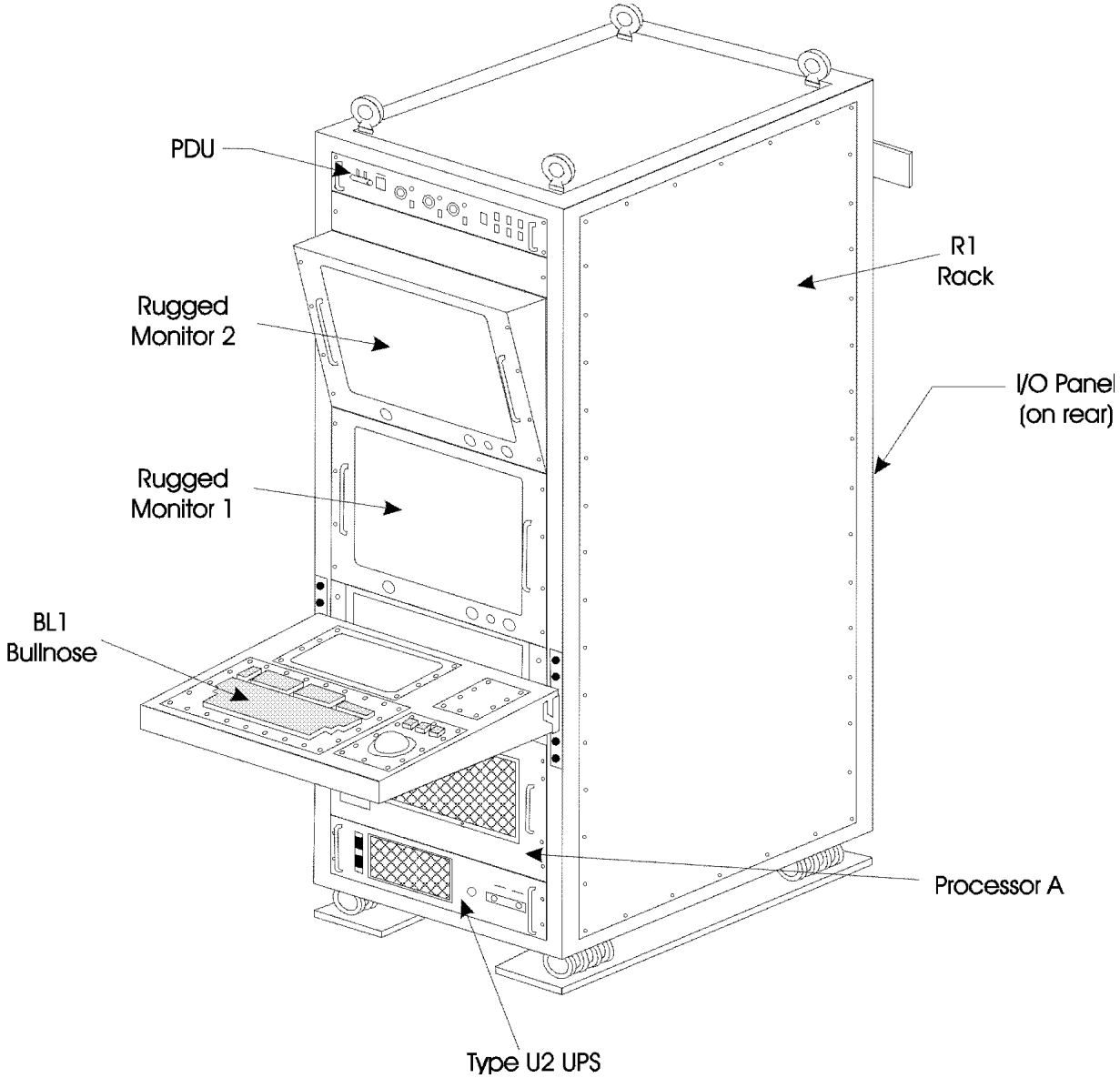

This page is reserved for the Rack Assembly drawing for CLIN 0001AA (Sheet 1 of 2)

This page is reserved for the Rack Assembly drawing for CLIN 0001AA (Sheet 2 of 2)

This page was intentionally left blank
for double-sided reproduction.

High-Performance Rugged Rack-Mounted Single-Monitor Console
CLIN 0003AA

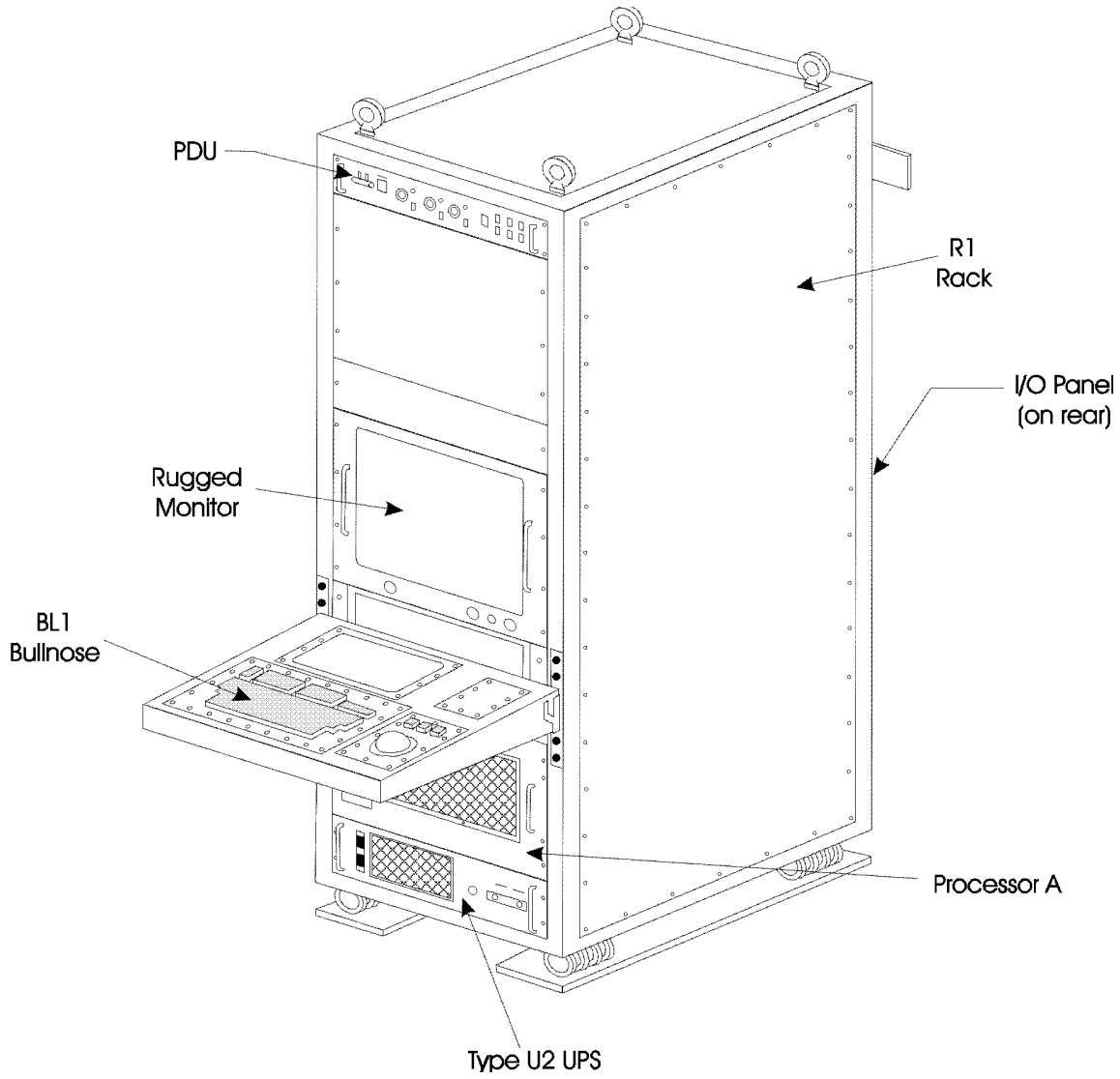

This page is reserved for the Rack Assembly drawing for CLIN 0003AA (Sheet 1 of 2)

This page is reserved for the Rack Assembly drawing for CLIN 0003AA (Sheet 2 of 2)

This page was intentionally left blank for double-sided reproduction.

Medium-Performance Rugged Rack-Mounted Single-Monitor Console
CLIN 0005AA

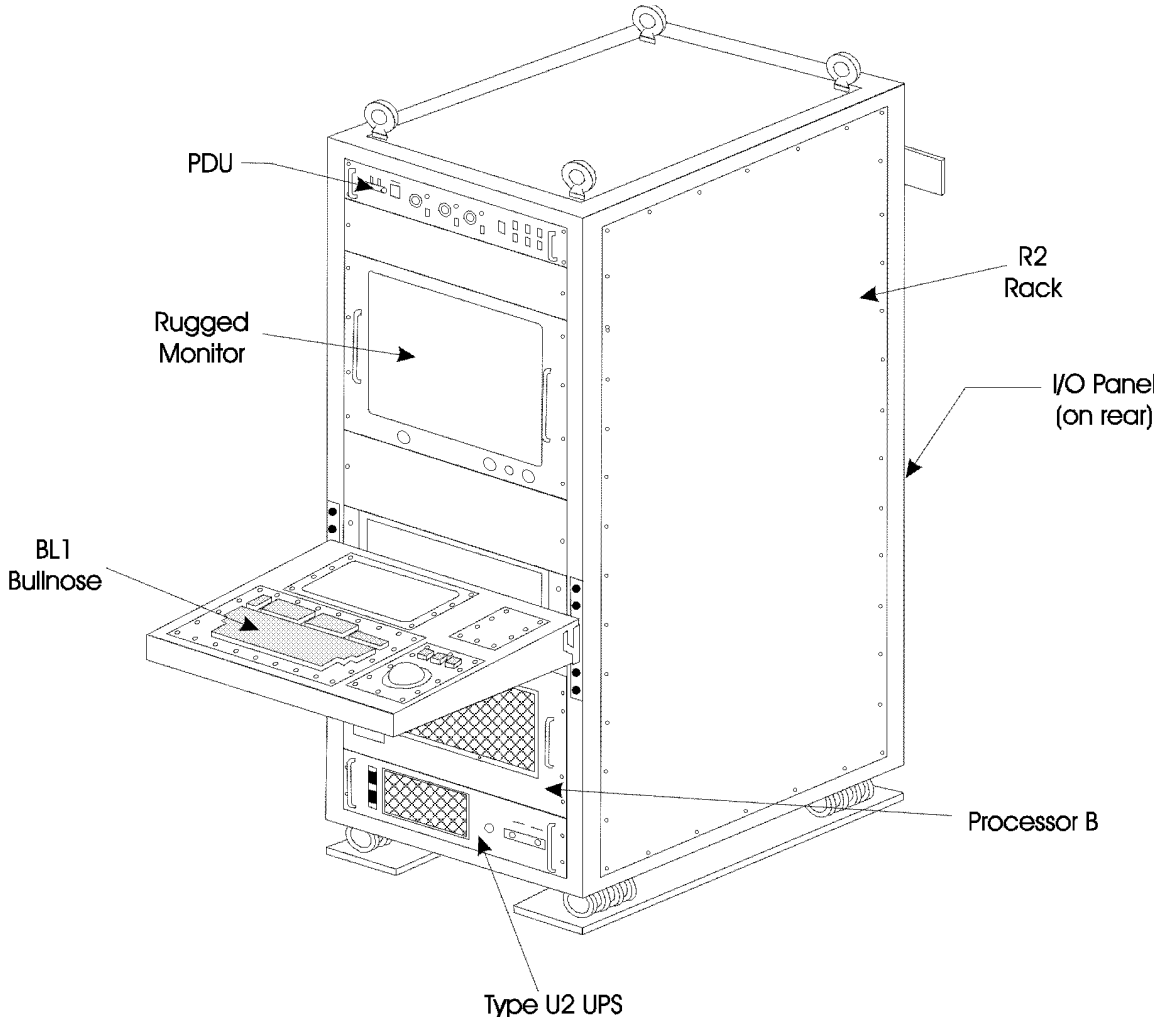

This page is reserved for the Rack Assembly drawing for CLIN 0005AA (Sheet 1 of 2)

This page is reserved for the Rack Assembly drawing for CLIN 0005AA (Sheet 2 of 2)

This page was intentionally left blank for double-sided reproduction.

High-Performance Rugged Rack-Mounted Server
CLIN 0007AA

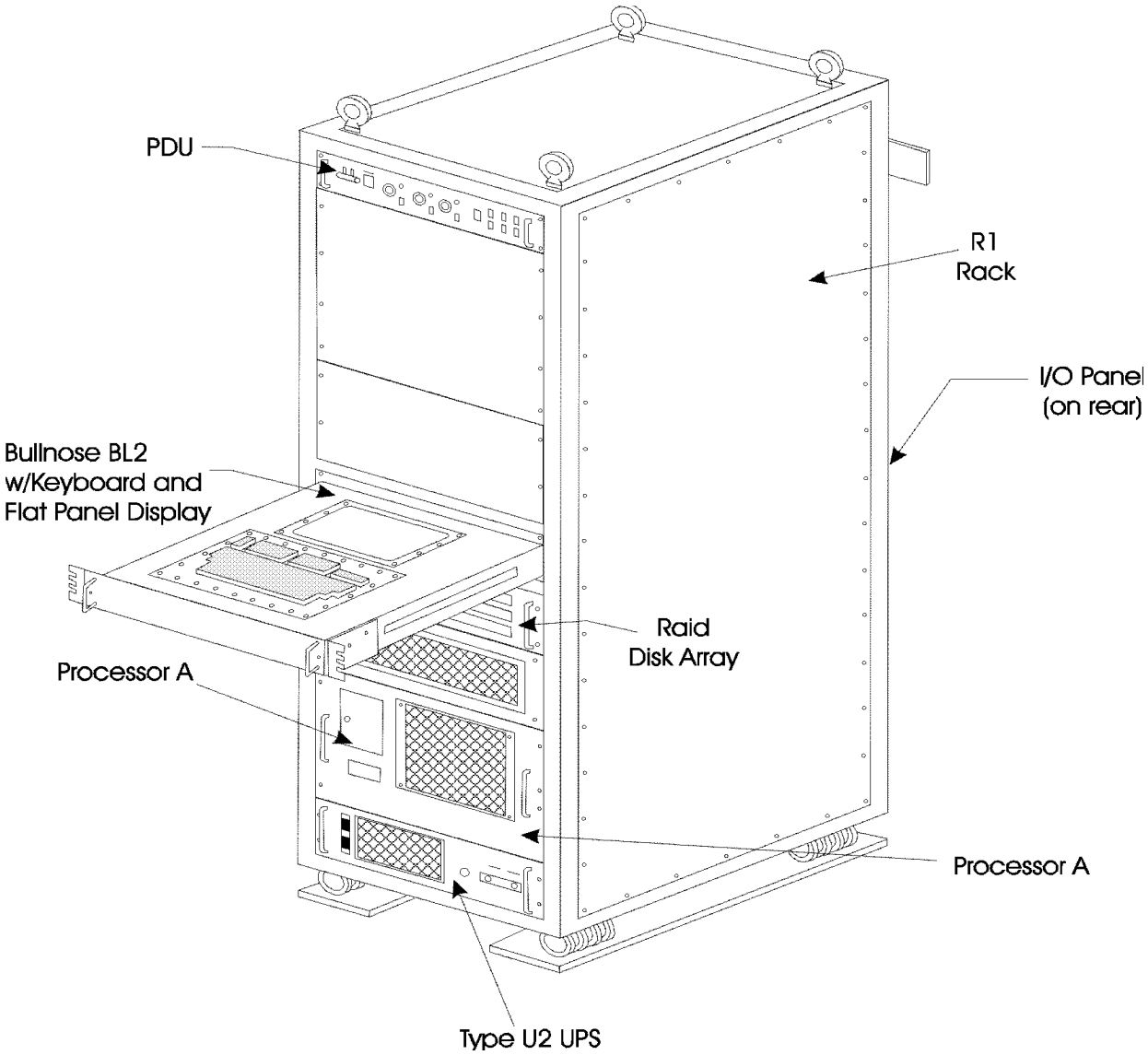

This page is reserved for the Rack Assembly drawing for CLIN 0007AA (Sheet 1 of 2)

This page is reserved for the Rack Assembly drawing for CLIN 0007AA (Sheet 2 of 2)

This page was intentionally left blank
for double-sided reproduction.

Tactical Rugged Rack-Mounted Workstation/Server
CLIN 0009AA

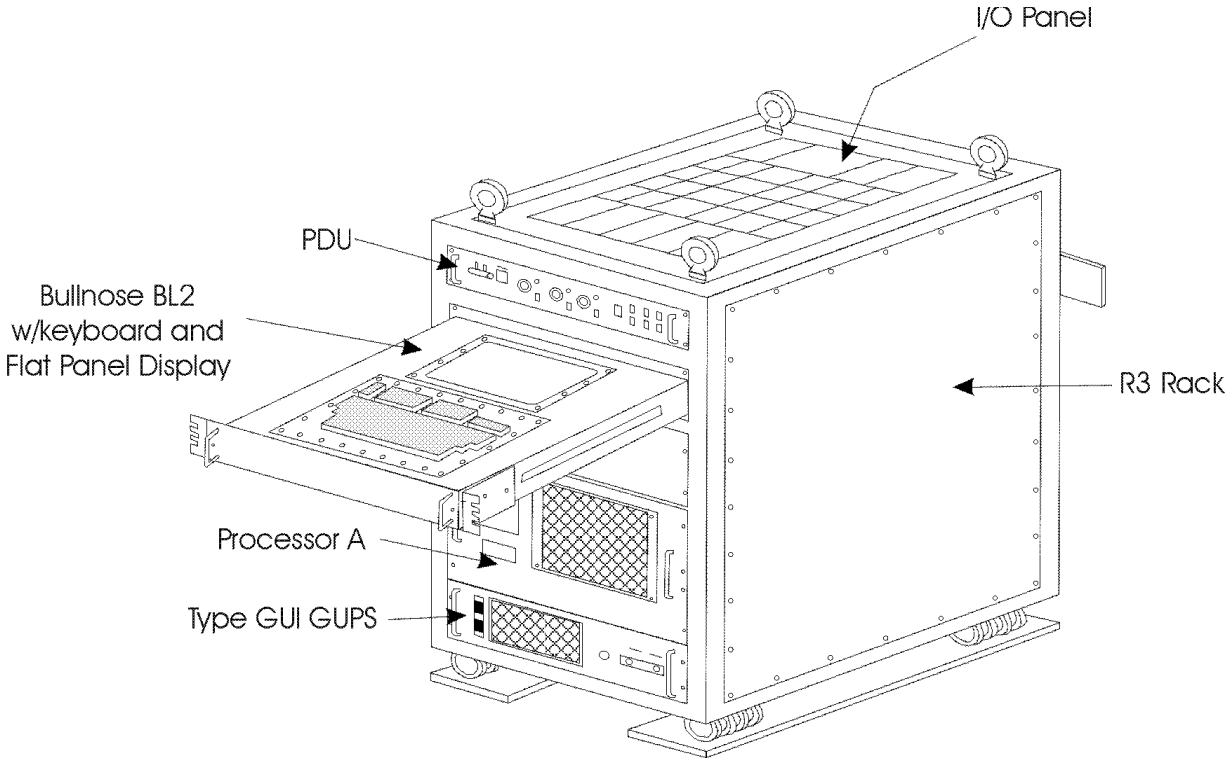

This page is reserved for the Rack Assembly drawing for CLIN 0009AA (Sheet 1 of 2)

This page is reserved for the Rack Assembly drawing for CLIN 0009AA (Sheet 2 of 2)

This page was intentionally left blank
for double-sided reproduction.

HP TAC-4 CUSTOMER SURVEY

Hewlett-Packard welcomes your feedback concerning the usefulness of this ordering guide. HP also encourages you to recommend products for inclusion on the contract. Please send your comments to:

Hewlett-Packard Company
300 Apollo Drive
Chelmsford, MA 01824
Attn: Walter Karpowski
TAC-4 Marketing Manager
Mailstop CHR-01-FO
FAX: (508) 436-5117

The TAC-4 Customer Survey is also available electronically from the TAC-4 Home Page at:

http://ww.hp.com/go/tac4

Your responses to the following questions will help us better serve your needs:

Were you able to find the information you needed? _____

Was the information clearly organized and presented? _____

Did you find any inconsistencies in the content? *(Please use specific page numbers if possible.)*

_____

What would you do to improve this document?_____

_____

_____

Are there any specific products or types of products you would like to see on the TAC-4 contract and in future revisions of this guide? _____

_____

_____

Do you have any other comments or suggestions? _____

_____

_____

_____

_____

Name_____

Government Agency/Company _____

Street Address_____

City _____ State _____ Zip_____

Phone No. _____ FAX_____

This page was intentionally left blank
for double-sided reproduction.

INDEX

Application Software, 5-2

C-Class Workstations, 1-5, 3-3, 3.1-8

CD-ROM Drives, 3.4-2

CETS Services, 6-4

CLIN Table (with OEM, Model, and Pricing), **D-1**

Commercial Hardware Products, 3-1

Compiler Software, 5-7

Configuration and Ordering Information, 2-1

Configuration Options, A-1
- Hardware, A-3
- Graphics, 3.4-5
- Racks, F-2
- SCSI Constraints, A-1

Contractor Engineering Technical Services, 6-4

Custom Configurations, 2-3

Custom Configuration Worksheets, B-1
- Model 712/80, B-19
- Model 712/100, B-17
- Model 748*i*, B-21
- Model C110, B-13
- Model J210, B-7
- Model J210 (Rack-Mounted), B-11
- Model J210XC, B-3
- Model V743 VXIbus, B-23

Database, Server, and Connectivity Software, 5-11

DoD Activity Forms, 2-7
- DD Form 448, Appendix C
- DD Form 448-2, Appendix C
- DD Form 1155, Appendix C

Diagnostic Capabilities, 6-9

Documentation, 6-2
DOS Windowing Software Products, 5-16

Engineering Technical Support Services, 6-4
Enhanced Portable Workstation, 1-6, 3-4
Environmental Specifications, 4-2, E-1

Floppy Drives, 3.4-18

Government Points of Contact, 1-12
Graphical User Interface Products, 5-17
Graphics
    Cards and Controllers, 3.4-4
    Configuration Options, 3.4-5
    Performance, 3.4-6
    Software, 5-18

Hard Disk Drives, 3.4-19
    External, 3.4-20
    Internal, 3.4-19
    Removable and Hot-Pluggable, 3.4-21
Hardware Configuration Options, A-3
    Communication Interfaces, A-8
    Fixed Storage, A-4, A-5
    Graphics Systems, A-7
    Human Interfaces, A-6
    Memory, A-3
    Monitors, A-3
    Removable Storage, A-5, A-6
High Availability Storage Enclosures and Disk Modules, 3.4-22
How to Configure a System, 2-1
How to Place an Order, 2-4
HP Points of Contact, 1-11

HP Model 712, 1-5, 3-4
HP Model 712/80, 3.1-10, 3.1-12
HP Model 712/100, 3.1-11, 3.1-13, 3.2-10
HP Model 743*i*, 1-9, 3-7
HP Model 748*i*, 1-9, 3-7
HP Model 748*i*/64, 3.1-14
HP Model 748*i*/100, 3.1-15
HP Model C110, 1-5, 3-3, 3.1-8, 3.1-9
HP Model D350, 1-8, 3-6, 3.2-6, 3.2-7
HP Model J210, 1-4, 3-2, 3.1-4, 3.1-5, 3.1-7, 3.2-8, 3.2-9
    Rack-Mounted, 4-3 to 4-10
HP Model J210XC, 1-4, 3-2, 3.1-3, 3.1-6
HP Model K220, 1-7, 3-5, 3.2-3, 3.2-5
HP Model K420, 1-7, 3-5, 3.2-2, 3.2-4
HP Model V743, 1-9, 3-7, 3.3-5
HP-UX, 5-3

J-Class Workstations, 1-4, 3-2, 3.1-3

Keyboards, Trackballs, and Input Devices, 3.4-14
    For Rugged Rack-Mounted Systems, 4-17

LaserROM, 6-2
Low-Cost Workstations, 3-4, 3.1-10, 3.1-11, 3.2-10

Mail-Back/Carry-In Service, 6-10
Maintenance and Repair, 6-9
Mass Storage Devices, 3.4-17
    Cables and Connectors, 3.4-26
    External Fixed Hard Disk Drives, 3.4-20
    Floppy Drives, 3.4-18
    Hard Disk Drives, 3.4-19
    High Availability Storage Enclosures and Disk Modules, 3.4-22

Internal Fixed Hard Disk Drives, 3.4-19
RAID Fixed Hard Disk Arrays, 3.4-23
Removable and Hot-Pluggable Disk Drives, 3.4-21
Tape Drives, 3.4-24
Miscellaneous Commercial Products, 3.4-46
Miscellaneous Tactical and Shipboard Products, 4-28
Cables and Connectors, 4-28
Encryption Products, 4-29
Monitors and Display Devices, 3.4-27

Navy-Specific Forms, 2-7
NAVCOMPT Form 2275, Appendix C
NAVCOMPT Form 2276, Appendix C
Networking Products, 3.4-30
Communications Hardware, 3.4-33
Host Interfaces, 3.4-30
Network Software, 5-9
New Products, 1-3

OEMs (by CLIN), D-1
Online Documentation Library, 6-2
On-Site Service and Repair, 6-11
Operating System, 5-3, 5-4
Real-Time, 5-3, 5-4
Operations Center, 6-9
Order Forms, C-1
DD Form 448, Appendix C
DD Form 448-2, Appendix C
DD Form 1155, Appendix C
NAVCOMPT Form 2275, Appendix C
NAVCOMPT Form 2276, Appendix C
TAC-4 Purchase List, Appendix C
TAC-4 Worksheet, Appendix C

Peripherals and Add-On Products, 1-9, 3-8, 3.4-1

Points of Contact, 1-11

Government, 1-12

HP, 1-11

Pricing (by CLIN), D-1

Portable Workstations

Commercial, 1-6, 3-4, 3.1-16

Ruggedized, 4-13, 4-14, 4-15

Power Devices, 3.4-35

Preconfigured System Bundles, 2-2

Printers, 3.4-40

Processor Modules, 3.3-2, 3.3-3, 3.3-11

Processors and Upgrades, 3.3-1

Rack Configurations, F-2

Rack Drawings, F-1

For Rugged Rack-Mounted System CLINs:

0001AA, F-3

0003AA, F-7

0005AA, F-11

0007AA, F-15

0009AA, F-19

Rack-Mounted Monitors, 4-19

Racks and Accessories, 3.4-38

RAID Fixed Hard Disk Arrays, 3.4-23

RAM Expansion Modules, 3.3-12

Real-Time Operating System, 5-3, 5-4

Reproducible Order Forms, C-1

Rugged Rack-Mounted Systems and Components

Base Processors, 4-3, 4-10

Cables and Connectors, 4-28

Encryption Products, 4-29

Keyboards, Trackballs, and Input Devices, 4-17

Miscellaneous, 4-28

Model J210, 4-3 to 4-10

Rack-Mounted Monitors, 4-19
Portable Workstations, 4-11, 4-13, 4-14, 4-15
Servers, 4-3
Vertical Height, F-2
Workstations, 4-3

Rugged Rack-Mounted System CLINs
0001AA, 4-5
0003AA, 4-6
0005AA, 4-7
0007AA, 4-8
0009AA, 4-9
0010AA, 4-14
0010AB, 4-15
0011AG, 4-13
0023AA, 4-10

Ruggedized Portable Workstations, 4-11, 4-13, 4-14, 4-15

SAIC Galaxy, 1-6, 3-4
SAIC Talon, 4-13
SCSI Configuration Constraints, A-1
Self-Maintenance, 6-9

Servers, 1-7, 2-2, 3-5, 4-3
D-Class, 1-8, 3-6
K-Class, 1-7, 3-5
Model D350, 3.2-6, 3.2-7
Model J210, 3.2-8, 3.2-9, 4-3, 4-8, 4-10
Model K220, 3-5, 3.2-3, 3.2-5
Model K420, 3-5, 3.2-2, 3.2-4
Rack-Mounted, 4-3, 4-8, 4-10
SMP, 3.2-2 – 3.2-7
Windows Application, 1-8, 3-6, 3.2-11, 3.2-12

Server CLINs
0015AB, 3.2-6
0015AC, 3.2-3
0015AD, 3.2-2
0017AA, 3.2-8
0020AA, 3.2-10

0027AA, 3.2-9
0027AG, 3.2-9
0125AA, 3.2-7
0130AA, 3.2-5
0130AB, 3.2-4
0195AA, 3.2-11
0195AB, 3.2-12

Service Center Locations, 6-10

Shipboard Power Devices, 4-20

Shipboard Racks and Accessories, 4-22

Shipping and Delivery, 2-8

Software, 5-1
Compilers, 5-7
Database, Server, and Connectivity Software, 5-11
DOS Windowing/Networking Products, 5-16
Graphical User Interface Products, 5-17
Graphics Software, 5-18
HP-UX, 5-3
License Types, 5-1
Network Software, 5-9
Operating System, 5-3
Real-Time Operating System, 5-3
Standard Operating System, 5-3

Software Support Services, 6-13

Spare Parts, 6-12

Specialized Processors, 1-9
VMEbus, 1-9, 3.3-2
VXIbus, 1-9
VXI Systems and Components, 3.3-4
Model V743/100, 3.3-5

Standard Operating System, 5-3

Support Services, 6-1
Diagnostic Capabilities, 6-9
Documentation, 6-2
Engineering Technical Support Services, 6-4
LaserROM, 6-2
Mail-Back/Carry-In Service, 6-10

Maintenance and Repair, 6-9
Online Documentation Library, 6-2
On-Site Service and Repair, 6-11
Operations Center, 6-9
Self-Maintenance, 6-9
Service Center Locations, 6-10
Software Support Services, 6-13
Spare Parts, 6-12
Support Services, 6-1
Training, 6-15

TAC-3, 1-3
TAC3/TAC4 Transition Support, 6-14
TAC-4
Contract Summary, 1-2
Help Desk, 1-10
Home Page, 1-11
Internet E-Mail Address, 1-11
Order Forms, C-1
Points of Contact, 1-11, 1-12
Product Overview, 1-3
Program Office, 1-11
TAC-4 Purchase List, 2-5, 2-6, Appendix C
TAC-4 Worksheet, 2-4, Appendix C
Tactical and Shipboard Products, 4-1
Tape Drives, 3.4-24
Telos ACE VME Portable Workstation, 1-6
Tie-Down Kits, 4-23
Training, 6-15
Transit Cases, 4-25

Video Products, 3.4-43
VME Portable Workstation, 4-14, 4-15
VMEbus Single-Board Computer, 1-9, 3-7, 3.3-2
VXIbus Systems and Components, 1-9, 3-7, 3.3-4

Windows Application Servers, 1-8, 3.2-11, 3.2-12
Dual Processor, 3.2-12

Workstations, 1-4, 1-6, 2-2, 3-2, 3.1-1, 4-3
C-Class, 1-5, 3-3, 3.1-8
J-Class, 1-4, 3-2, 3.1-3
Low-Cost, 3-4, 3.1-10, 3.1-11, 3.2-10
Model 712, 1-5, 3-4
Model 712/80, 3.1-10, 3.1-12
Model 712/100, 3.1-11, 3.1-13,
Model 748*i*/64, 3.1-14
Model 748*i*/100, 3.1-15
Model C110, 3-3, 3.1-8, 3.1-9
Model J210, 3-2, 3.1-4, 3.1-5, 3.1-7
Model J210XC, 3-2, 3.1-3, 3.1-6
Modular, 3.1-14
Personal, 3.1-8
Portable, 1-6, 3-4, 3.1-16
Ruggedized Rack-Mounted, 4-3, 4-5, 4-10
SAIC Galaxy, 3.1-16
SAIC Talon, 4-13

Workstation CLINs
0013AA, 3.1-4
0013AB, 3.1-3
0014AA, 3.1-8
0015AA, 3.1-5
0017AA, 3.2-8
0019AB, 3.1-10
0019AC, 3.1-10
0020AA, 3.1-11
0021AF, 3.1-16
0021AG, 3.1-16
0027AA, 3.1-7
0027AG, 3.1-7
0027AH, 3.1-6
0027AJ, 3.1-6
0028AA, 3.1-9
0028AB, 3.1-9
0031AH, 3.1-16

0035AA, 3.1-12
0035AH, 3.1-12
0035AJ, 3.1-12
0036AA, 3.1-13
0037AH, 3.1-14
0037AJ, 3.1-14
0037AK, 3.1-15
0037AL, 3.1-15

Workstation/Servers

Model 712/100, 3.2-10
Model J210, 3.2-8, 3.2-9

Workstation Specification Summary, 2-3